Intel® Arria® 10 FPGA Development Kit User Guide

Online Version

Send Feedback

UG-20007

683526

2023.07.12

Contents

1. Intel® Arria® 10 FPGA Development Kit Overview.... 4
1.1. General Description.... 5
1.2. Recommended Operating Conditions.... 6
1.3. Handling the Board.... 7

2. Getting Started.... 8
2.1. Installing the Subscription Edition Software.... 8
2.1.1. Activating Your License.... 8
2.2. Development Kit Package.... 9
2.3. Installing the USB-Blaster Driver.... 9

3. Development Board Setup.... 11
3.1. Applying Power to the Board.... 11
3.2. Default Switch and Jumper Settings.... 12
3.3. Default Switch and Resistor Settings.... 15
3.4. Factory Reset.... 18

4. Board Test System.... 20
4.1. Preparing the Board.... 22
4.2. Running the Board Test System.... 22
4.3. Version Selector.... 23
4.4. Using the Board Test System.... 25
4.4.1. Using the Configure Menu.... 25
4.4.2. The System Info Tab.... 26
4.4.3. The GPIO Tab.... 28
4.4.4. The Flash Tab.... 29
4.4.5. The XCVR Tab.... 31
4.4.6. The PCIe Tab.... 34
4.4.7. The FMC A Tab.... 37
4.4.8. The FMC B Tab.... 40
4.4.9. The DDR3 Tab.... 43
4.4.10. The DDR4 Tab.... 45
4.4.11. The Power Monitor.... 47
4.4.12. The Clock Control.... 49

5. Board Update Portal.... 52
5.1. Connecting to the Board Update Portal Web Page.... 53
5.1.1. Using the Board Update Portal to Update User Designs.... 54

6. Board Components.... 55
6.1. Board Overview.... 55
6.2. MAX V CPLD System Controller.... 59
6.3. FPGA Configuration.... 66
6.3.1. Configuring the FPGA Using Programmer.... 66
6.4. Status Elements.... 66
6.5. User Input/Output.... 68
6.5.1. User-Defined Push Buttons.... 68
6.5.2. User-Defined DIP Switch.... 68
6.5.3. User-Defined LEDs.... 68

6.5.4. Character LCD....70
6.5.5. DisplayPort....71
6.5.6. SDI Video Input/Output Ports....72
6.6. Clock Circuitry....74
6.6.1. On-Board Oscillators....74
6.6.2. Off-Board Clock I/O....75
6.7. Components and Interfaces....76
6.7.1. PCI Express....76
6.7.2. 10/100/1000 Ethernet PHY....79
6.7.3. HiLo External Memory Interface....81
6.7.4. FMC....86
6.7.5. QSFP....98
6.7.6. SFP+....99
6.7.7. I^2C....100
6.8. Memory....102
6.8.1. Flash....102
6.8.2. Programming the Flash Using Quartus Programmer....104
6.9. Board Power Supply....105
6.9.1. Power Distribution System....106
6.9.2. Power Measurement....107
6.10. Daughtercards....108
6.10.1. External Memory Interface....109

A. Additional Information....117

A.1. Document Revision History for the Intel Arria 10 FPGA Development Kit User Guide....117
A.2. Compliance and Conformity Statements....118
A.2.1. CE EMI Conformity Caution....118

683526 | 2023.07.12

Send Feedback

1. Intel® Arria® 10 FPGA Development Kit Overview

The Intel® Arria® 10 GX FPGA development board provides a hardware platform for evaluating the performance and features of the Intel Arria 10 device.

Intel Corporation. All rights reserved. Intel, the Intel logo, and other Intel marks are trademarks of Intel Corporation or its subsidiaries. Intel warrants performance of its FPGA and semiconductor products to current specifications in accordance with Intel's standard warranty, but reserves the right to make changes to any products and services at any time without notice. Intel assumes no responsibility or liability arising out of the application or use of any information, product, or service described herein except as expressly agreed to in writing by Intel. Intel customers are advised to obtain the latest version of device specifications before relying on any published information and before placing orders for products or services.
*Other names and brands may be claimed as the property of others.

ISO 9001:2015 Registered

1.1. General Description

Figure 1. Arria 10 GX Block Diagram

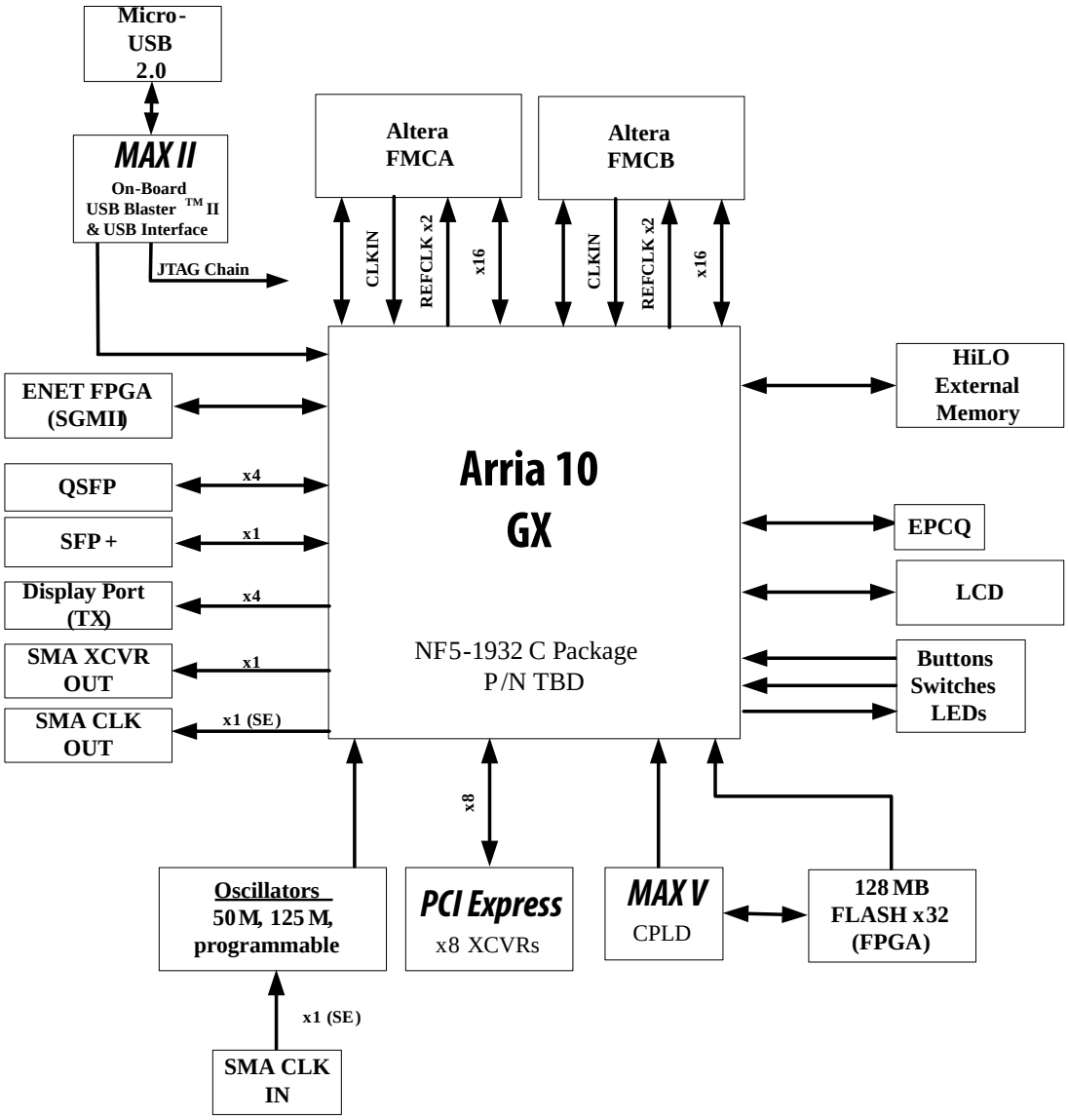

Figure 2. Overview of the Development Board Features (ES Edition)

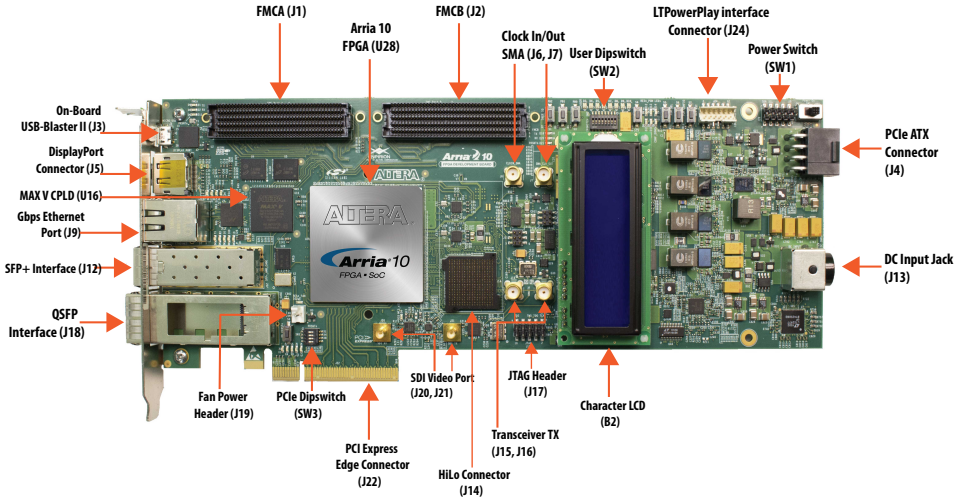

Figure 3. Overview of the Development Board Features

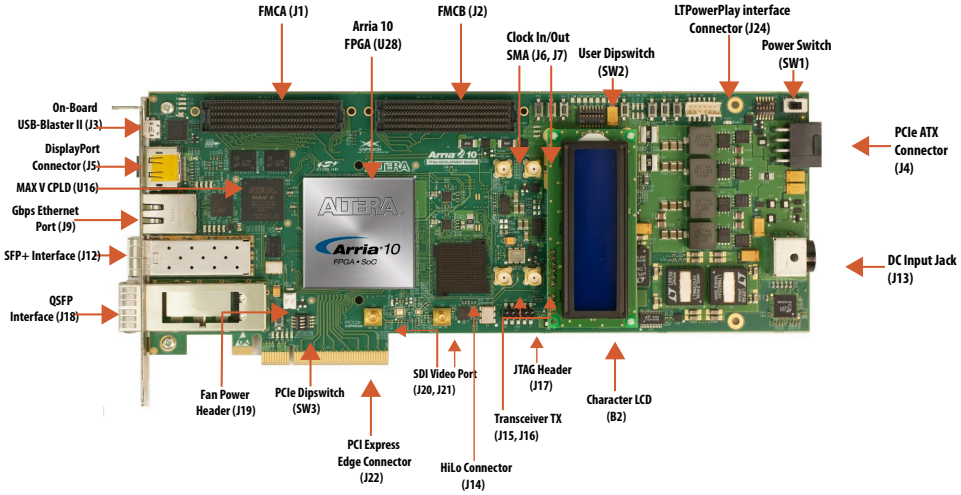

Related Information

Board Components on page 55
For details on the board components.

1.2. Recommended Operating Conditions

- Recommended ambient operating temperature range: 0C to 45C
- Maximum ICC load current: 80A
- Maximum ICC load transient percentage: 35%
- FPGA maximum power supported by the supplied heatsink/fan: 100W

1.3. Handling the Board

When handling the board, it is important to observe static discharge precautions.

Caution: Without proper anti-static handling, the board can be damaged. Therefore, use anti-static handling precautions when touching the board.

Caution: This development kit should not be operated in a Vibration Environment.

2. Getting Started

2.1. Installing the Subscription Edition Software

The Quartus Prime Standard Edition software provides the necessary tools used for developing hardware and software for Altera devices.

Included in the Quartus Prime Standard Edition software are the Quartus Prime software, the Nios II® EDS, and the MegaCore IP Library. To install the Altera development tools, download the Quartus Prime Standard Edition software from the Quartus Prime Standard Edition software page of the Altera website.

Related Information

Quartus Prime Software Page

2.1.1. Activating Your License

Purchasing this kit entitles you to a one-year license for the Development Kit Edition (DKE) of the Quartus Prime software. After the year, your DKE license will no longer be valid and you will not be permitted to use this version of the Quartus Prime software. To continue using the Quartus Prime software, you should download the free Quartus Prime Lite Edition or purchase a subscription to Quartus Prime Standard or Pro software.

Before using the Quartus Prime software, you must activate your license, identify specific users and computers, and obtain and install a license file. If you already have a licensed version of the subscription edition, you can use that license file with this kit. If not, follow these steps:

1. Log on at the myAltera Account Sign In web page, and click **Sign In**.
2. On the myAltera Home web page, click the Self-Service Licensing Center link.
3. Locate the serial number printed on the side of the development kit box below the bottom bar code. The number consists of alphanumeric characters and does not contain hyphens.
4. On the Self-Service Licensing Center web page, click the Find it with your License Activation Code link.
5. In the **Find/Activate Products** dialog box, enter your development kit serial number and click **Search**.
6. When your product appears, turn on the check box next to the product name.
7. Click **Activate Selected Products**, and click **Close**.
8. When licensing is complete, Altera emails a `license.dat` file to you. Store the file on your computer and use the License Setup page of the **Options** dialog box in the Quartus Prime software to enable the software.

Intel Corporation. All rights reserved. Intel, the Intel logo, and other Intel marks are trademarks of Intel Corporation or its subsidiaries. Intel warrants performance of its FPGA and semiconductor products to current specifications in accordance with Intel's standard warranty, but reserves the right to make changes to any products and services at any time without notice. Intel assumes no responsibility or liability arising out of the application or use of any information, product, or service described herein except as expressly agreed to in writing by Intel. Intel customers are advised to obtain the latest version of device specifications before relying on any published information and before placing orders for products or services.
*Other names and brands may be claimed as the property of others.

ISO 9001:2015 Registered

Related Information

- Altera Software Installation and Licensing
  Comprehensive information for installing and licensing Altera software.
- myAltera Account Sign In web page

2.2. Development Kit Package

1. Download the Arria 10 FPGA Development Kit package zip file available at the Intel website.
2. Extract the contents of the zip file to your hard drive.
   The development kit directory structure is shown in the following figure.

Figure 4. Installed Development Kit Directory Structure

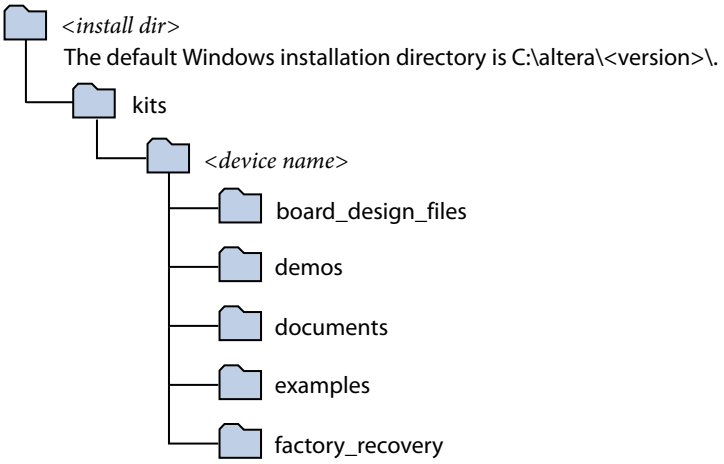

Table 1. Installed Directory Contents

Directory Name	Description of Contents
`board_design_files`	Contains schematic, layout, assembly, and bill of material board design files. Use these files as a starting point for a new prototype board design.
`demos`	Contains demonstration applications when available.
`documents`	Contains the documentation.
`examples`	Contains the sample design files for this kit.
`factory_recovery`	Contains the original data programmed onto the board before shipment. Use this data to restore the board with its original factory contents.

Related Information

Link to download zip file for the Arria 10 Development Kit Package

2.3. Installing the USB-Blaster Driver

The development board includes integrated USB-Blaster circuitry for FPGA programming. However, for the host computer and board to communicate, you must install the On-Board USB-Blaster II driver on the host computer.

Installation instructions for the On-Board USB-Blaster II driver for your operating system are available on the Altera website. On the Altera Programming Cable Driver Information page of the Altera website, locate the table entry for your configuration and click the link to access the instructions.

Related Information

Altera Programming Cable Driver Information
Click on the link for your operating system.

3. Development Board Setup

This section describes how to apply power to the board and provides default switch and jumper settings.

3.1. Applying Power to the Board

This development kit ships with its board switches preconfigured to support the design examples in the kit.

If you suspect that your board might not be currently configured with the default settings, follow the instructions in the Default Switch and Jumper Settings section of this chapter.

1. The development board ships with design examples stored in the flash memory device. To load the design stored in the factory portion of flash memory, verify SW6.4 is set to ON. This is the default setting.
2. Connect the supplied power supply to an outlet and the DC Power Jack (J13) on the FPGA board.

   Caution: Use only the supplied power supply. Power regulation circuitry on the board can be damaged by power supplies with greater voltage.
3. Set the power switch (SW1) to the on position.

When the board powers up, the parallel flash loader (PFL) on the MAX V reads a design from flash memory and configures the FPGA. When the configuration is complete, green LEDs illuminate signaling the device configured successfully. If the configuration fails, the red LED illuminates.

Intel Corporation. All rights reserved. Intel, the Intel logo, and other Intel marks are trademarks of Intel Corporation or its subsidiaries. Intel warrants performance of its FPGA and semiconductor products to current specifications in accordance with Intel's standard warranty, but reserves the right to make changes to any products and services at any time without notice. Intel assumes no responsibility or liability arising out of the application or use of any information, product, or service described herein except as expressly agreed to in writing by Intel. Intel customers are advised to obtain the latest version of device specifications before relying on any published information and before placing orders for products or services.
*Other names and brands may be claimed as the property of others.

ISO 9001:2015 Registered

3.2. Default Switch and Jumper Settings

This topic shows you how to restore the default factory settings and explains their functions.

Caution: Do not install or remove jumpers (shunts) while the development board is powered on.

Figure 5. Default Switch and Jumper Settings on the Top

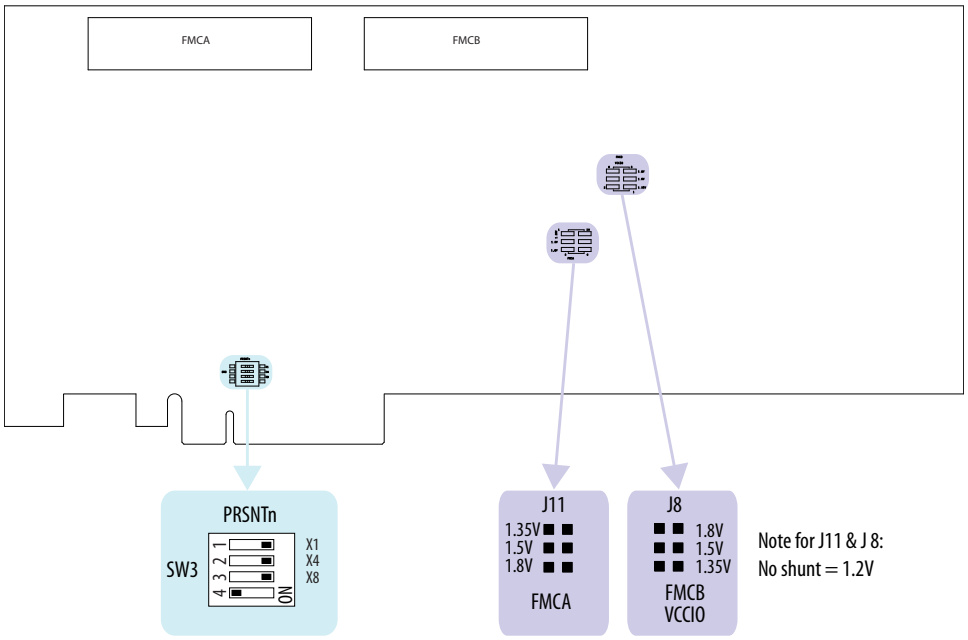

Figure 6. Default Switch Settings on the Bottom

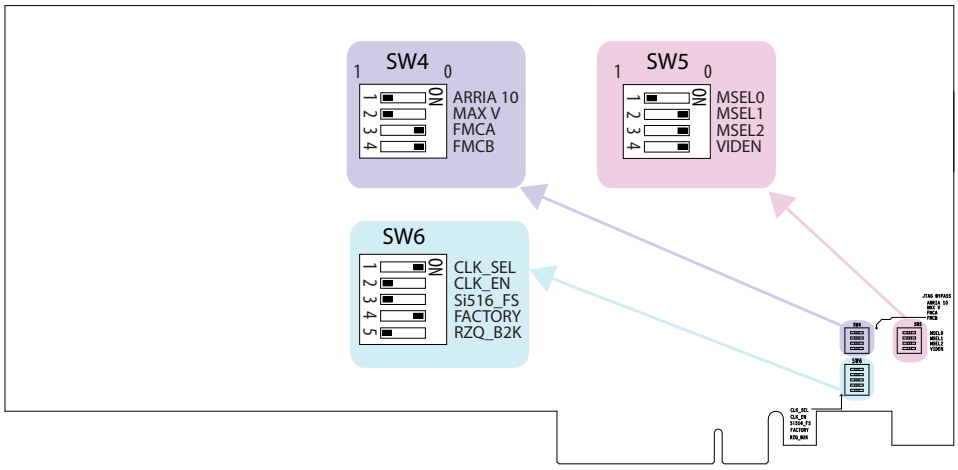

1. Set DIP switch bank (SW3) to match the following table.

Table 2. SW3 DIP PCIe Switch Default Settings (Board Top)

Switch	Board Label	Function	Default Position
1	x1	ON for PCIe x1	ON
2	x4	ON for PCIe x4	ON
3	x8	ON for PCIe x8	ON
4	—	OFF for 1.35 V MEM_VDD power rail	OFF

2. If all of the jumper blocks are open, the FMCA and FMCB VCCIO value is 1.2 V. To change that value, add shunts as shown in the following table.

Table 3. Default Jumper Settings for the FPGA Mezzanine Card (FMC) Ports (Board Top)

Board Reference	Board Label	Description
J8 pins 1-2	1.35V	1.35 V FMCB V_{CCIO} select
J8 pins 3-4	1.5V	1.5 V FMCB V_{CCIO} select
J8 pins 5-6	1.8V	1.8 V FMCB V_{CCIO} select
J11 pins 1-2	1.35V	1.35 V FMCA V_{CCIO} select
J11 pins 3-4	1.5V	1.5 V FMCA V_{CCIO} select
J11 pins 5-6	1.8V	1.8 V FMCA V_{CCIO} select

3. Set DIP switch bank (SW4) to match the following table.

Table 4. SW4 JTAG DIP Switch Default Settings (Board Bottom)

Switch	Board Label	Function	Default Position
1	ARRIA 10	OFF to enable the Arria 10 in the JTAG chain	OFF
2	MAX V	OFF to enable the MAX V in the JTAG chain	OFF
3	FMCA	ON to bypass the FMCA connector in the JTAG chain	ON
4	FMCB	ON to bypass the FMCB connector in the JTAG chain	ON

4. Set DIP switch bank (SW5) to match the following table.

Table 5. SW5 DIP Switch Default Settings (Board Bottom)

Switch	Board Label	Function	Default Position
1	MSEL0	OFF for MSEL0 = 1; for FPP standard mode	OFF
2	MSEL1	ON for MSEL1 = 0; for FPP standard mode	ON
3	MSEL2	ON for MSEL2 = 0; for FPP standard mode	ON
4	VIDEN	OFF for enabling `VID_EN` for the Smart Voltage ID (SmartVID) feature	ON

5. Set DIP switch bank (SW6) to match the following table.

Table 6. SW6 DIP Switch Default Settings (Board Bottom)

Switch	Board Label	Function	Default Position
1	CLK_SEL	ON for 100 MHz on-board clock oscillator selection OFF for SMA input clock selection	ON
2	CLK_EN	OFF for setting CLK_ENABLE signal high to the MAV V	OFF
3	Si516_FS	ON for setting the SDI REFCLK frequency to 148.35 MHz OFF for setting the SDI REFCLK frequency to 148.5 MHz	OFF
4	FACTORY	ON to load factory image from flash OFF to load user image #1 from flash	ON
5	RZQ_B2K	ON for setting RZQ resistor of Bank 2K to 99.17 ohm OFF for setting RZQ resistor of Bank 2K to 240 ohm	OFF

3.3. Default Switch and Resistor Settings

This topic shows you how to restore the default factory settings and explains their functions.

Figure 7. Default Switch and Resistor Settings on the Top

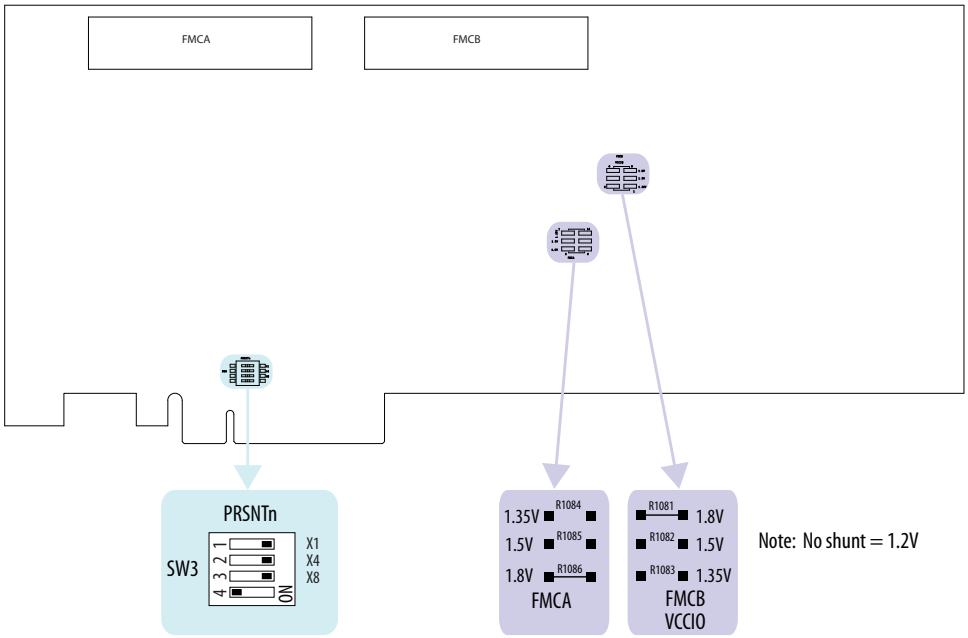

Figure 8. Default Switch Settings on the Bottom

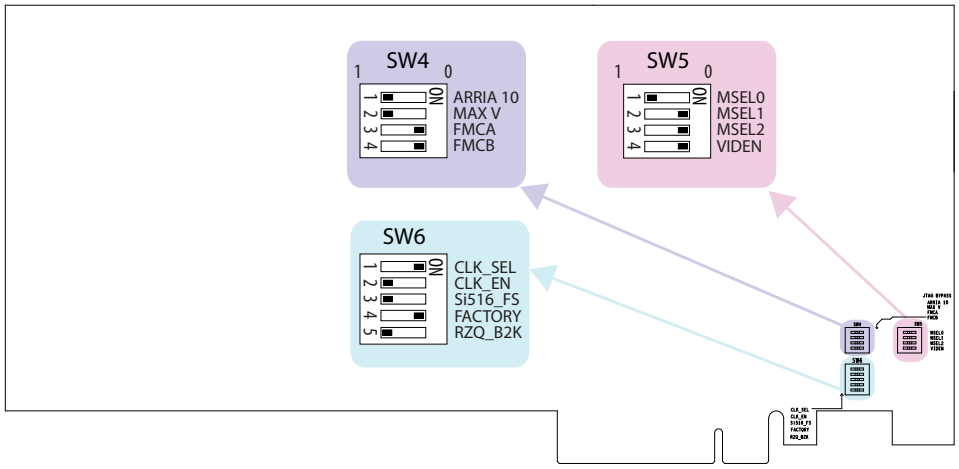

1. Set DIP switch bank (SW3) to match the following table.

Table 7. SW3 DIP PCIe Switch Default Settings (Board Top)

Switch	Board Label	Function	Default Position
1	x1	ON for PCIe x1	ON
2	x4	ON for PCIe x4	ON
3	x8	ON for PCIe x8	ON
4	—	OFF for 1.35 V MEM_VDD power rail	OFF

2. If all of the resistors are open, the FMCA and FMCB VCCIO value is 1.2 V. To change that value, add resistors as shown in the following table.

Table 8. Default Resistor Settings for the FPGA Mezzanine Card (FMC) Ports (Board Top)

Board Reference	Board Label	Description
R1083	1.35V	1.35 V FMCB V_{CCIO} select
R1082	1.5V	1.5 V FMCB V_{CCIO} select
R1081	1.8V	1.8 V FMCB V_{CCIO} select *Note:* A 0 Ohm resistor is installed by default.
R1084	1.35V	1.35 V FMCA V_{CCIO} select
R1085	1.5V	1.5 V FMCA V_{CCIO} select
R1086	1.8V	1.8 V FMCA V_{CCIO} select *Note:* A 0 Ohm resistor is installed by default.

3. Set DIP switch bank (SW4) to match the following table.

Table 9. SW4 JTAG DIP Switch Default Settings (Board Bottom)

Switch	Board Label	Function	Default Position
1	ARRIA 10	OFF to enable the Arria 10 in the JTAG chain	OFF
2	MAX V	OFF to enable the MAX V in the JTAG chain	OFF
3	FMCA	ON to bypass the FMCA connector in the JTAG chain	ON
4	FMCB	ON to bypass the FMCB connector in the JTAG chain	ON

4. Set DIP switch bank (SW5) to match the following table.

Table 10. SW5 DIP Switch Default Settings (Board Bottom)

Switch	Board Label	Function	Default Position
1	MSEL0	OFF for MSEL0 = 1; for FPP standard mode	OFF
2	MSEL1	ON for MSEL1 = 0; for FPP standard mode	ON
3	MSEL2	ON for MSEL2 = 0; for FPP standard mode	ON
4	VIDEN	OFF for enabling `VID_EN` for the Smart Voltage ID (SmartVID) feature	ON

5. Set DIP switch bank (SW6) to match the following table.

Table 11. SW6 DIP Switch Default Settings (Board Bottom)

Switch	Board Label	Function	Default Position
1	CLK_SEL	ON for 100 MHz on-board clock oscillator selection OFF for SMA input clock selection	ON
2	CLK_EN	OFF for setting CLK_ENABLE signal high to the MAV V	OFF
3	Si516_FS	ON for setting the SDI REFCLK frequency to 148.35 MHz OFF for setting the SDI REFCLK frequency to 148.5 MHz	OFF
4	FACTORY	ON to load factory image from flash OFF to load user image #1 from flash	ON
5	RZQ_B2K	ON for setting RZQ resistor of Bank 2K to 99.17 ohm OFF for setting RZQ resistor of Bank 2K to 240 ohm	OFF

3.4. Factory Reset

To do a factory reset, follow these steps:

1. Install the latest Altera software tools, including the Quartus Prime software, Nios II processor, and IP functions. If necessary, download the Quartus Prime Pro Edition software from the Altera Download Center.
2. Set the board switches to the factory default settings described in "Default Switch and Resistor Settings".
3. Open the GUI application "**BoardTestSystem.exe**".
   a. Launch the Nios II command shell, change to directory to `<package dir>\examples\board_test_system\`, and then type in "**./BoardTestSystem.exe**" to open the GUI.
   b. Change directory to `<package dir>\examples\board_test_system\`, and then double click "**BoardTestSystem.exe**" to open the GUI.
4. Select "**Restore** -> **Factory Restore**".

Figure 9. Arria 10 FPGA Board Test System Factory Restore Select

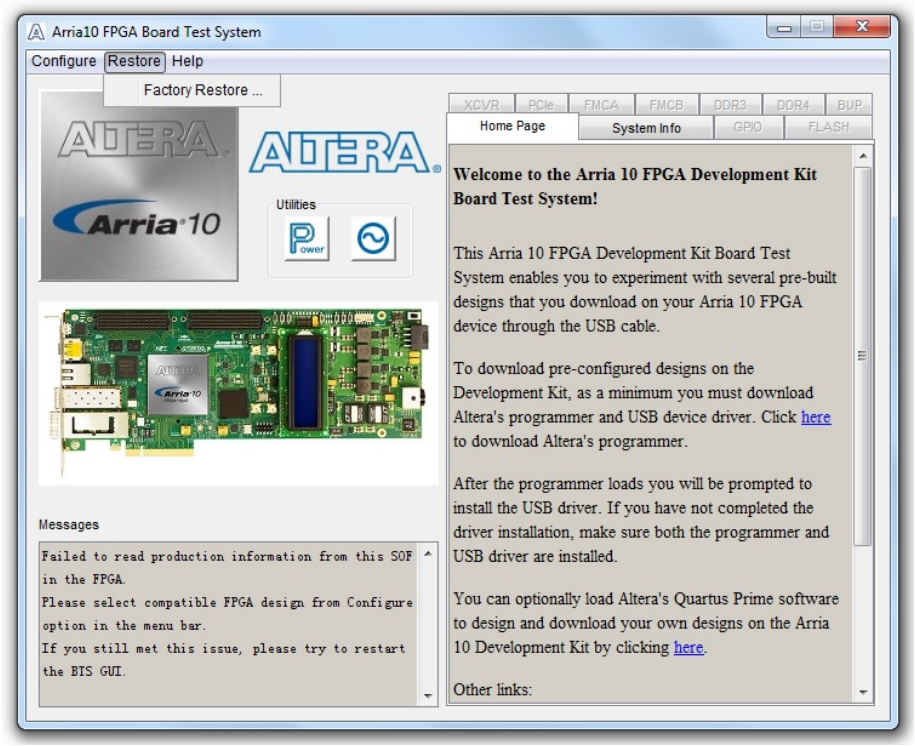

5. Set the correct board information and then click restore. The restore process takes about 10 minutes.

Figure 10. Factory Restore Window

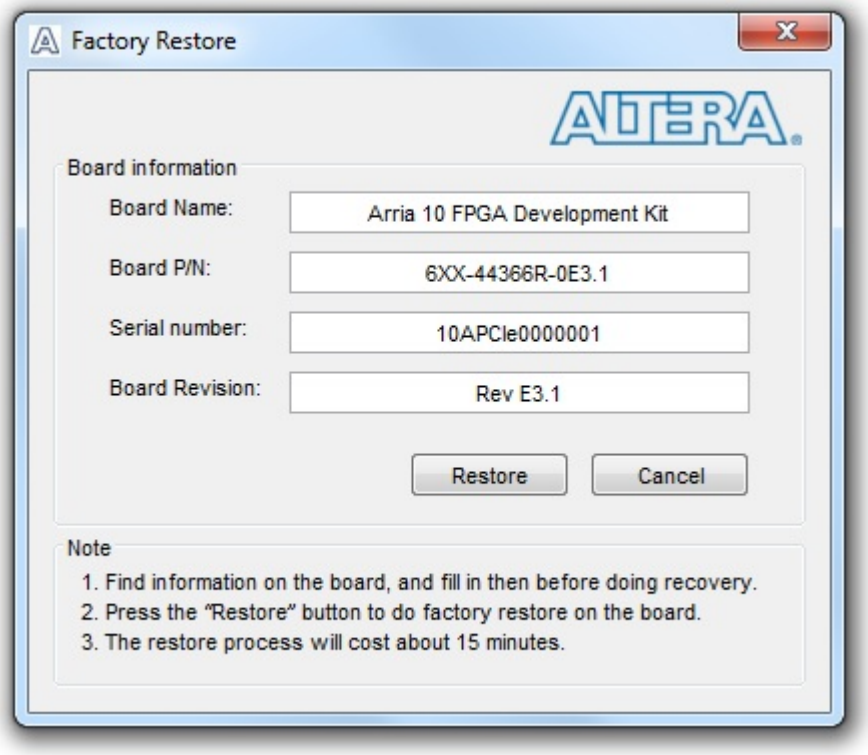

Related Information

- Board Update Portal on page 52
- Using the Board Update Portal to Update User Designs on page 54

4. Board Test System

The Board Test System (BTS) provides an easy-to-use interface to alter functional settings and observe the results. You can use the BTS to test board components, modify functional parameters, observe performance, and measure power usage.

Figure 11. Board Test System GUI

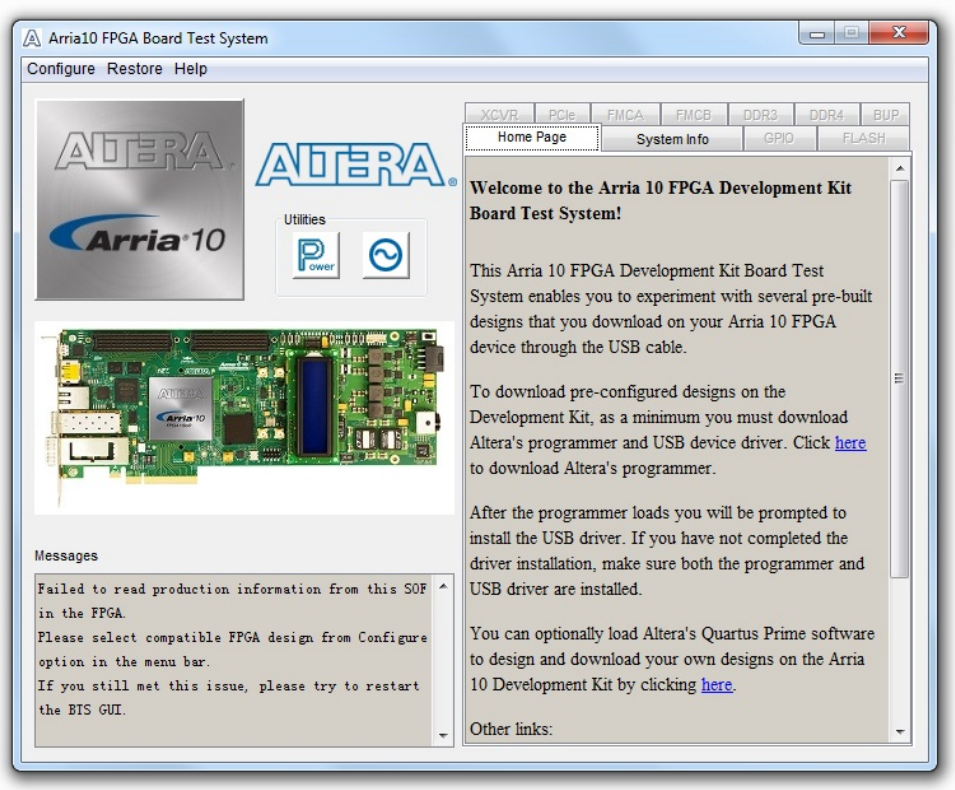

While using the BTS, you reconfigure the FPGA several times with test designs specific to the functionality you are testing. Several designs are provided to test the major board features. Each design provides data for one or more tabs in the application. The Configure menu identifies the appropriate design to download to the FPGA for each tab.

After successful FPGA configuration, the appropriate tab appears that allows you to exercise the related board features. Highlights appear in the board picture around the corresponding components.

Intel Corporation. All rights reserved. Intel, the Intel logo, and other Intel marks are trademarks of Intel Corporation or its subsidiaries. Intel warrants performance of its FPGA and semiconductor products to current specifications in accordance with Intel's standard warranty, but reserves the right to make changes to any products and services at any time without notice. Intel assumes no responsibility or liability arising out of the application or use of any information, product, or service described herein except as expressly agreed to in writing by Intel. Intel customers are advised to obtain the latest version of device specifications before relying on any published information and before placing orders for products or services.
*Other names and brands may be claimed as the property of others.

ISO 9001:2015 Registered

The BTS communicates over the JTAG bus to a test design running in the FPGA. The Board Test System and Power Monitor share the JTAG bus with other applications like the Nios II debugger and the SignalTap® II Embedded Logic Analyzer. Because the BTS is designed based on the Quartus Programmer and System Console, be sure to close other applications before you use the BTS application.

4.1. Preparing the Board

With the power to the board off, follow these steps:

1. Connect the USB cable to your PC and the board.
2. Ensure that the Ethernet patch cord is plugged into the RJ-45 connector.
3. Check the development board switches and jumpers are set according to your preferences. See the "Factory Default Switch and Jumper Settings" section.
4. Set the load selector switch (SW6.4) to OFF for user hardware1 (page #1).

   The development board ships with the CFI flash device preprogrammed with a default:

   - Factory FPGA configuration for running the Board Update Portal design example
   - User configuration for running the Board Test System demonstration
5. Turn on the power to the board. The board loads the design stored in the user hardware1 portion of flash memory into the FPGA. If your board is still in the factory configuration, or if you have downloaded a newer version of the Board Test System to flash memory through the Board Update Portal, the design loads the GPIO, Ethernet, and flash memory tests.

   To ensure operating stability, keep the USB cable connected and the board powered on when running the demonstration application. The application cannot run correctly unless the USB cable is attached and the board is on.

Related Information

Default Switch and Jumper Settings on page 12

4.2. Running the Board Test System

To run the Board Test System (BTS), navigate to the `<package dir>\examples\board_test_system` directory and run the `BoardTestSystem.exe` application.

On Windows, you can also run the BTS from the **Start ➤ All Programs ➤ Altera** menu.

A GUI appears, displaying the application tab that corresponds to the design running in the FPGA. The development board's flash memory ships preconfigured with the design that corresponds to the GPIO tab.

Note: The BTS relies on the Quartus Prime software's specific library. Before running the BTS, open the Quartus Prime software. It sets the environment variable `$QUARTUS_ROOTDIR` automatically. The Board Test System uses this environment variable to locate the Quartus Prime library.

The BTS will pick up the Quartus Programmer to configure the FPGA device on your development kit. Make sure the Quartus Prime software you are using is the version supporting the FPGA silicon on the board.

4.3. Version Selector

The BTS will prompt you with a Version Selector window once opened. You can also open the Version Selector window through the **Configure** tab by clicking **Select Silicon Version**. Select the silicon version of the Arria 10 device that is installed on your board.

Figure 12. Configure Tab Version Selector Option

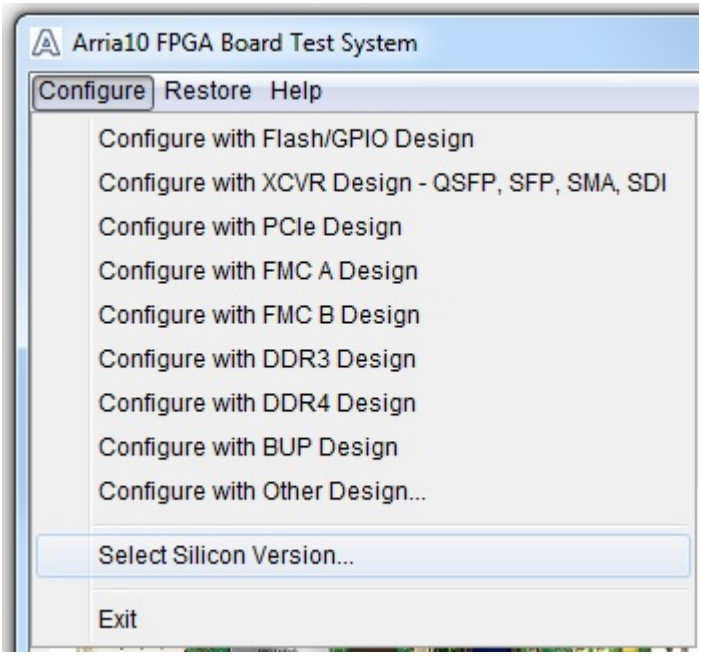

Figure 13. Version Selector

If you do not know, or are unsure of the version, enter the board serial number in the box on the right and the software will pick the right version based on the table below. The numbers here are the last 3-4 digits of the serial number which can be found on the bottom of your board.

Figure 14. Board Serial Number Sticker

Table 12. Serial Number to Arria 10 Silicon Revision

Serial Number	Arria 10 Silicon Revision
10APCIe000[< 0332]	ES2
10APCIe000[0332 – 0383]	PRD-1
10APCIe000[0500 – 0999]	ES3
10APCIe000[1000+]	PRD

4.4. Using the Board Test System

This section describes each control in the Board Test System application.

4.4.1. Using the Configure Menu

Use the Configure menu to select the design you want to use. Each design example tests different board features. Choose a design from this menu and the corresponding tabs become active for testing.

Figure 15. The Configure Menu

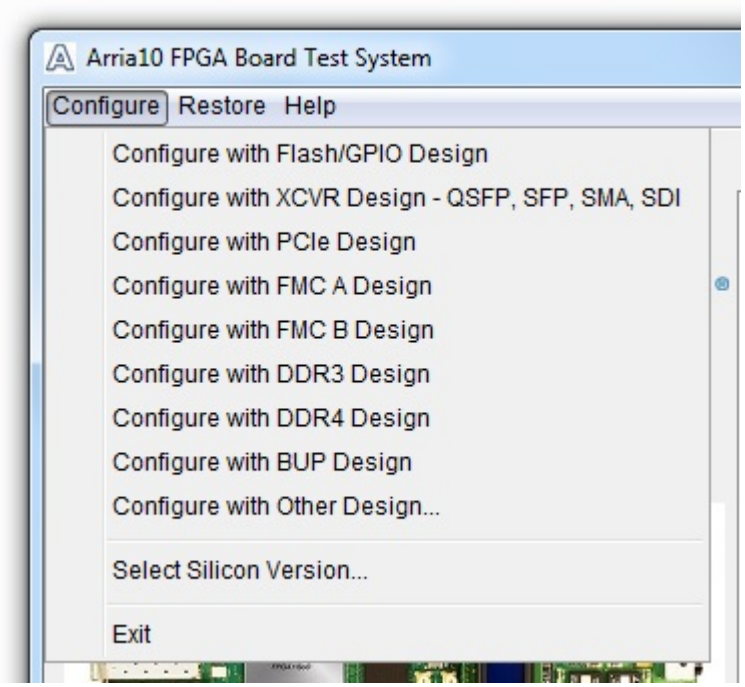

To configure the FPGA with a test system design, perform the following steps:

1. On the **Configure** menu, click the configure command that corresponds to the functionality you wish to test.
2. In the dialog box that appears, click **Configure** to download the corresponding design to the FPGA.
3. When configuration finishes, close the Quartus Programmer if open. The design begins running in the FPGA. The corresponding GUI application tabs that interface with the design are now enabled.

If you use the Quartus Programmer for configuration, rather than the Board Test System GUI, you may need to restart the GUI.

4.4.2. The System Info Tab

The System Info tab shows the board's current configuration. The tab displays the contents of the MAX V registers, the JTAG chain, the board's MAC address, the Qsys memory map, and other details stored on the board.

Figure 16. The System Info Tab

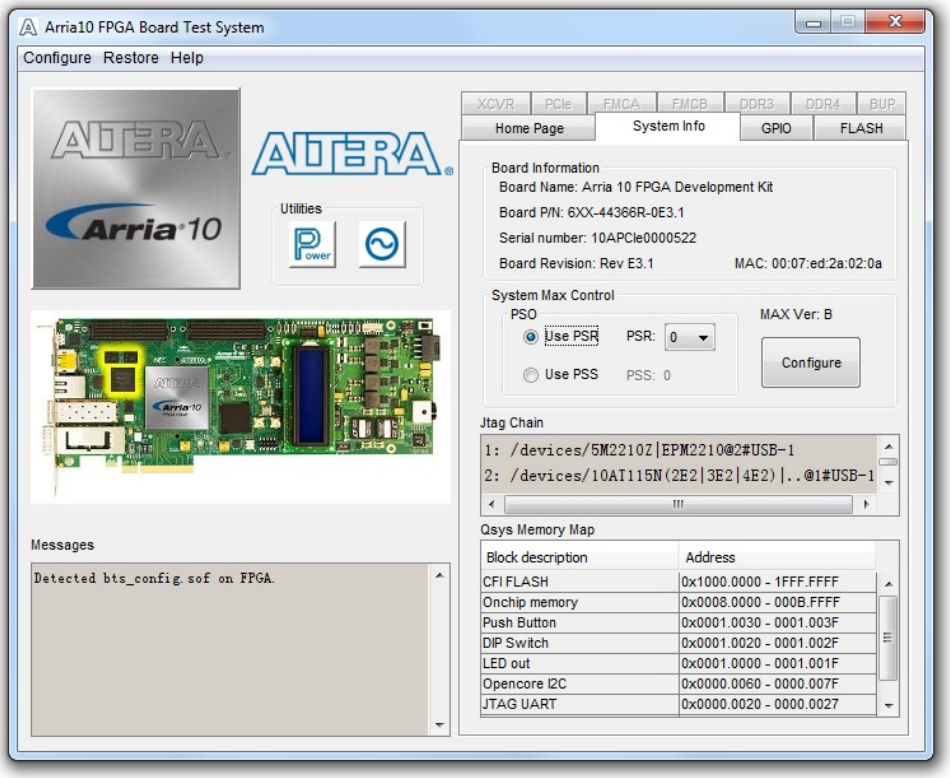

Table 13. Controls on the System Info Tab

Controls	Description
Board Information Controls	The board information is updated once the GPIO design is configured. Otherwise, this control displays the default static information about your board.
Board Name	Indicates the official name of the board, given by the Board Test System.
Board P/N	Indicates the part number of the board.
Serial Number	Indicates the serial number of the board.
Factory Test Version	Indicates the version of the Board Test System currently running on the board.
MAC	Indicates the MAC address of the board.
MAX V Control	Allows you to view and change the current register values, which take effect immediately: System Reset (SRST) — Write only. Click to reset the FPGA. Page Select Override (PSO) — Read/Write

continued...

Controls	Description
	Page Select Register (PSR) — Read/Write Page Select Switch (PSS) — Read only MAX Ver: Indicates the version of MAX V code currently running on the board.
JTAG Chain	Shows all the devices currently in the JTAG chain.
Qsys Memory Map	Shows the memory map of the Qsys system on your board.

4.4.3. The GPIO Tab

The GPIO tab allows you to interact with all the general purpose user I/O components on your board. You can write to the character LCD, read DIP switch settings, turn LEDs on or off, and detect push button presses.

Figure 17. The GPIO Tab

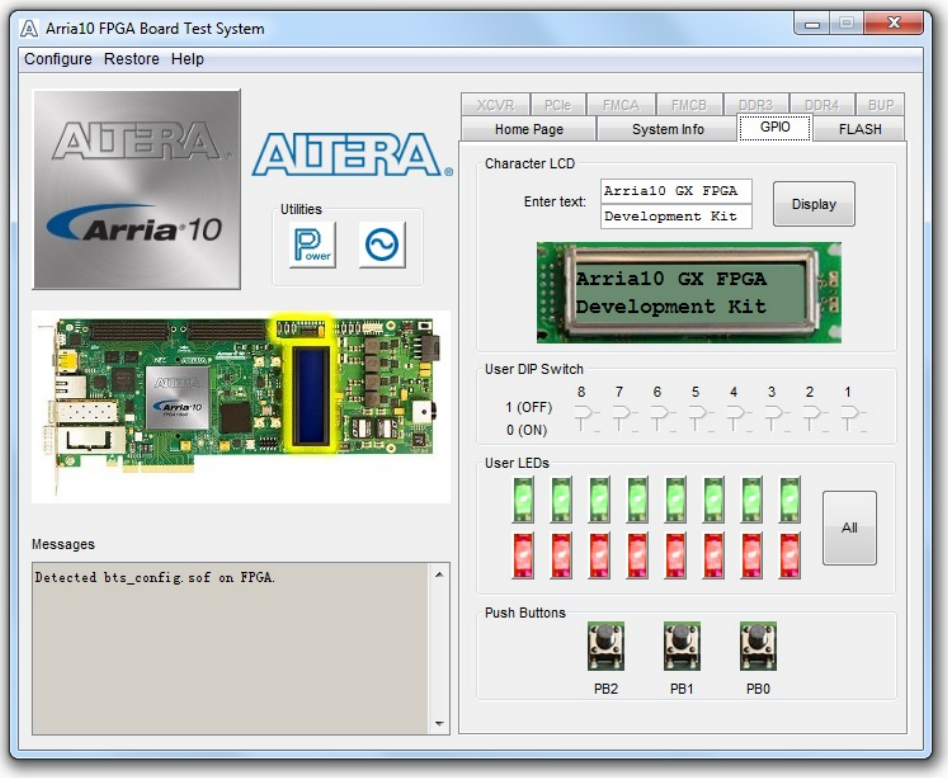

Table 14. Controls on the GPIO Tab

Character LCD	Allows you to display text strings on the character LCD on your board. Type text in the text boxes and then click **Display**.
User DIP Switch	Displays the current positions of the switches in the user DIP switch bank (SW2). Change the switches on the board to see the graphical display change accordingly.
User LEDs	Displays the current state of the user LEDs for the FPGA. To toggle the board LEDs, click the **0** to **7** buttons to toggle red or green LEDs, or click the **All** button.
Push Button Switches	Read-only control displays the current state of the board user push buttons. Press a push button on the board to see the graphical display change accordingly.

4.4.4. The Flash Tab

The **Flash Tab** allows you to read and write flash memory on your board. The memory table will display the CFI ROM table contents by default after you configure the FPGA.

Figure 18. The Flash Tab

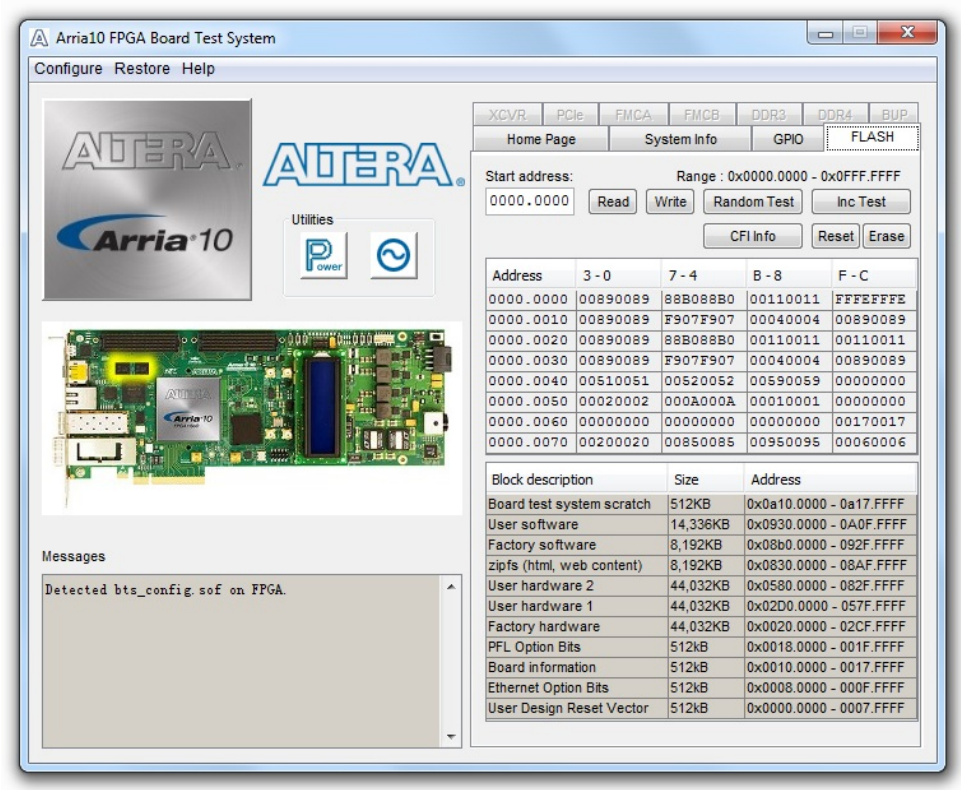

Control	Description
Read	Reads the flash memory on your board. To see the flash memory contents, type a starting address in the text box and click Read. Values starting at the specified address appear in the table.
Write	Writes the flash memory on your board. To update the flash memory contents, change values in the table and click Write. The application writes the new values to flash memory and then reads the values back to guarantee that the graphical display accurately reflects the memory contents.
Random Test	Starts a random data pattern test to flash memory, limited to the 512 K test system scratch page.
CFI Query	Updates the memory table, displaying the CFI ROM table contents from the flash device.
Increment Test	Starts an incrementing data pattern test to flash memory, limited to the 512 K test system scratch page.

continued...

Control	Description
Reset	Executes the flash device's reset command and updates the memory table displayed on the **Flash** tab.
Erase	Erases flash memory.
Flash Memory Map	Displays the flash memory map for the development board.

4.4.5. The XCVR Tab

This tab allows you to perform loopback tests on the QSFP, SFP, SMA, and SDI ports.

Figure 19. The XCVR Tab

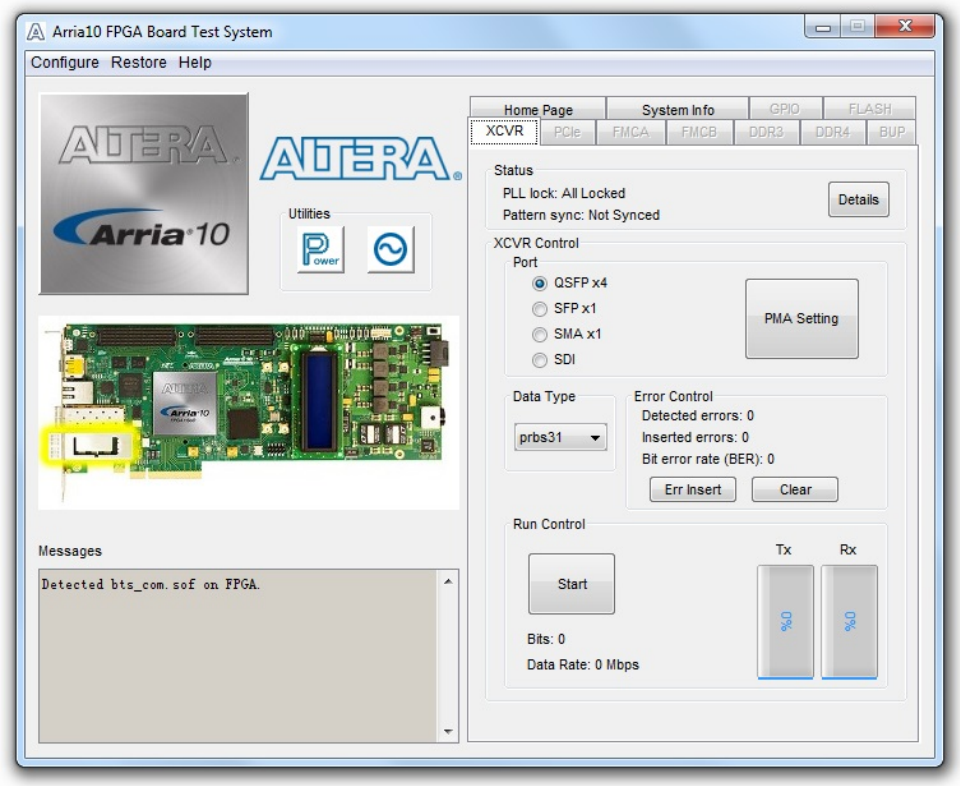

Control	Description
Status	Displays the following status information during a loopback test: PLL lock—Shows the PLL locked or unlocked state. Pattern sync—Shows the pattern synced or not synced state. The pattern is considered synced when the start of the data sequence is detected. Details—Shows the PLL lock and pattern sync status: 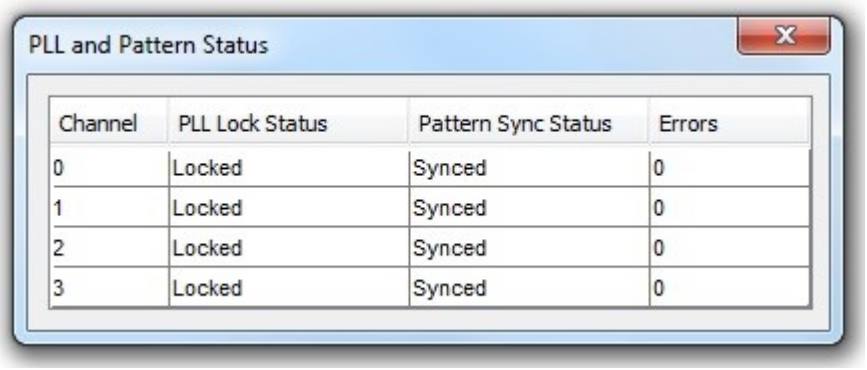
Port	Allows you to specify which interface to test. The following port tests are available:

continued...

Control	Description
	QSFP x4 SFP x1 SMA x1 SDI x1
PMA Setting	Allows you to make changes to the PMA parameters that affect the active transceiver interface. The following settings are available for analysis: Serial Loopback—Routes signals between the transmitter and the receiver. VOD—Specifies the voltage output differential of the transmitter buffer. Pre-emphasis tap • 1st pre—Specifies the amount of pre-emphasis on the pre-tap of the transmitter buffer. • 2nd pre—Specifies the amount of pre-emphasis on the second pre-tap of the transmitter buffer. • 1st post—Specifies the amount of pre-emphasis on the first post tap of the transmitter buffer. • 2nd post—Specifies the amount of pre-emphasis on the second post tap of the transmitter buffer. Equalizer—Specifies the AC gain setting for the receiver equalizer in four stage mode. DC gain—Specifies the DC gain setting for the receiver equalizer in four stage mode. VGA—Specifies the VGA gain value. All PMA settings should be changed as in Figure 20 on page 33.
Data Type	Specifies the type of data contained in the transactions. The following data types are available for analysis: • PRBS 7—Selects pseudo-random 7-bit sequences. • PRBS 15—Selects pseudo-random 15-bit sequences. • PRBS 23—Selects pseudo-random 23-bit sequences. • PRBS 31—Selects pseudo-random 31-bit sequences. • HF—Selects highest frequency divide-by-2 data pattern 10101010. • LF—Selects lowest frequency divide by 33 data pattern.
Error Control	Displays data errors detected during analysis and allows you to insert errors: • Detected errors—Displays the number of data errors detected in the hardware. • Inserted errors—Displays the number of errors inserted into the transmit data stream. • Insert Error—Inserts a one-word error into the transmit data stream each time you click the button. Insert Error is only enabled during transaction performance analysis. • Clear—Resets the Detected errors and Inserted errors counters to zeroes.
Loopback	Start—Initiates the selected ports transaction performance analysis. *Note:* Always click **Clear** before **Start**. Stop—Terminates transaction performance analysis. TX and RX performance bars—Show the percentage of maximum theoretical data rate that the requested transactions are able to achieve.

Figure 20. Set PMA Values Window

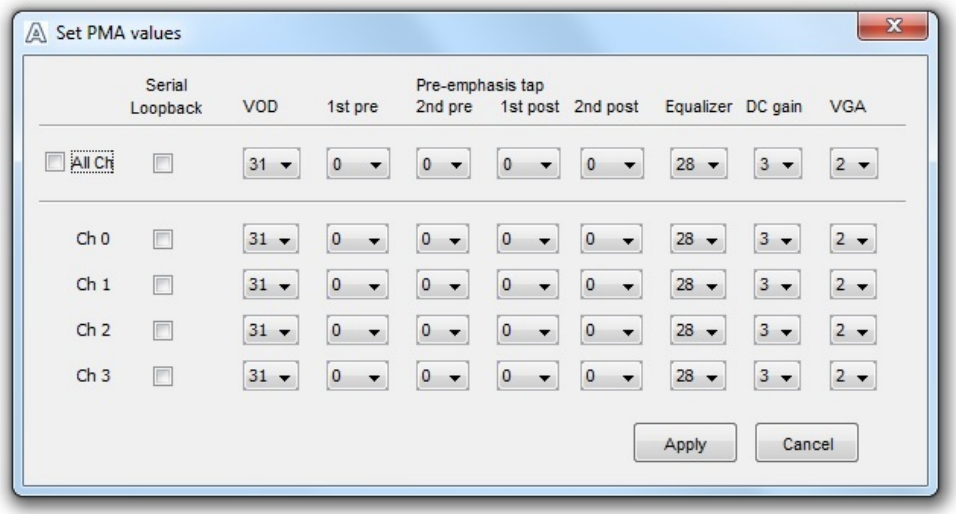

4.4.6. The PCIe Tab

This tab allows you to run a PCIe loopback test on your board. You can also load the design and use an oscilloscope to measure an eye diagram of the PCIe transmit signals.

Figure 21. The PCIe Tab

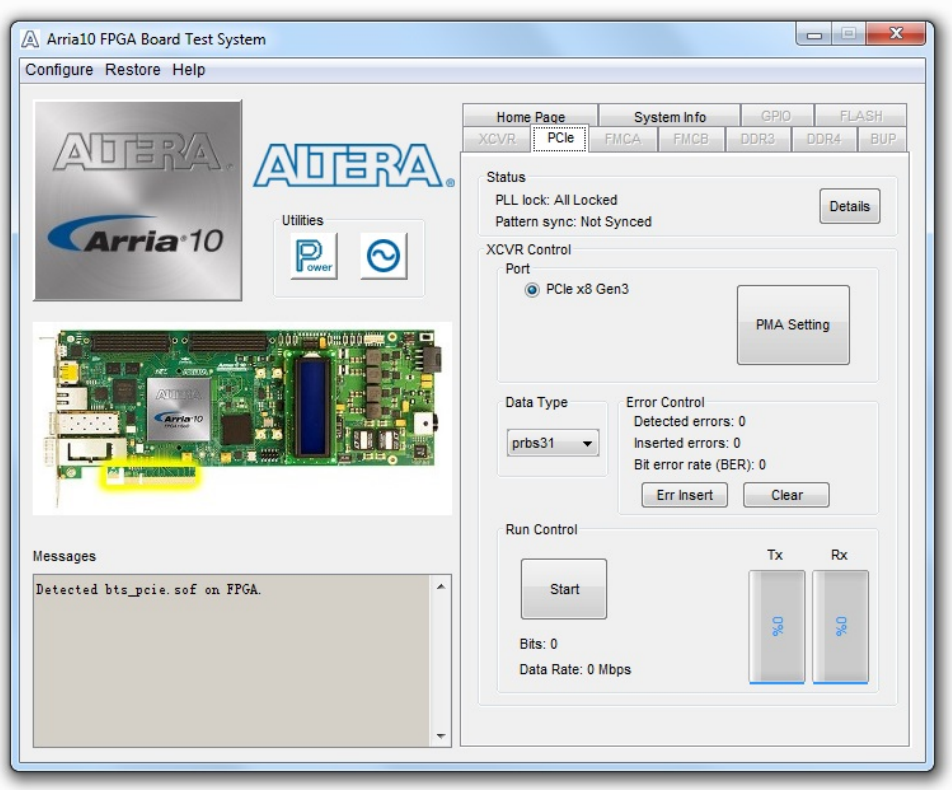

Control	Description
Status	Displays the following status information during a loopback test: PLL lock—Shows the PLL locked or unlocked state. Pattern sync—Shows the pattern synced or not synced state. The pattern is considered synced when the start of the data sequence is detected.

continued...

Control	Description
	Details—Shows the PLL lock and pattern sync status: 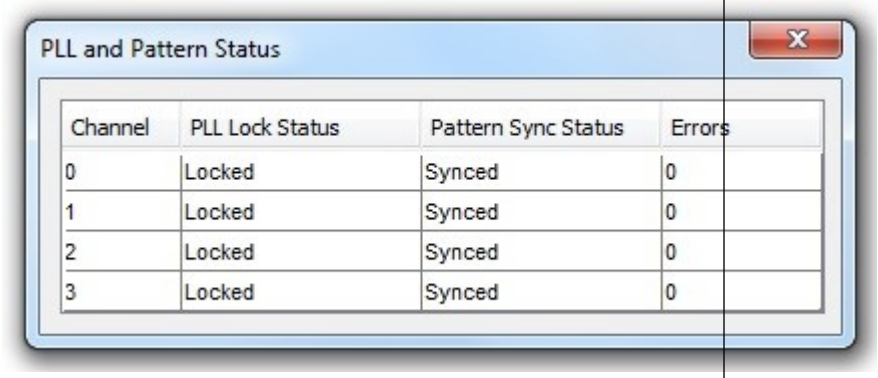 PLL and Pattern Status Channel | PLL Lock Status | Pattern Sync Status | Errors 0 | Locked | Synced | 0 1 | Locked | Synced | 0 2 | Locked | Synced | 0 3 | Locked | Synced | 0
Port	PCIe x8 Gen3
PMA Setting	Allows you to make changes to the PMA parameters that affect the active transceiver interface. The following settings are available for analysis: Serial Loopback—Routes signals between the transmitter and the receiver. VOD—Specifies the voltage output differential of the transmitter buffer. Pre-emphasis tap • 1st pre—Specifies the amount of pre-emphasis on the pre-tap of the transmitter buffer. • 2nd pre—Specifies the amount of pre-emphasis on the second pre-tap of the transmitter buffer. • 1st post—Specifies the amount of pre-emphasis on the first post tap of the transmitter buffer. • 2nd post—Specifies the amount of pre-emphasis on the second post tap of the transmitter buffer. Equalizer—Specifies the AC gain setting for the receiver equalizer in four stage mode. DC gain—Specifies the DC gain setting for the receiver equalizer in four stage mode. VGA—Specifies the VGA gain value. All PMA settings should be changed as in Figure 20 on page 33.
Data Type	Specifies the type of data contained in the transactions. The following data types are available for analysis: • PRBS 7—Selects pseudo-random 7-bit sequences. • PRBS 15—Selects pseudo-random 15-bit sequences. • PRBS 23—Selects pseudo-random 23-bit sequences. • PRBS 31—Selects pseudo-random 31-bit sequences. • HF—Selects highest frequency divide-by-2 data pattern 10101010. • LF—Selects lowest frequency divide by 33 data pattern.
Error Control	Displays data errors detected during analysis and allows you to insert errors: • Detected errors—Displays the number of data errors detected in the hardware. • Inserted errors—Displays the number of errors inserted into the transmit data stream. • Insert Error—Inserts a one-word error into the transmit data stream each time you click the button. Insert Error is only enabled during transaction performance analysis. • Clear—Resets the Detected errors and Inserted errors counters to zeroes.
Loopback	Start—Initiates the selected ports transaction performance analysis.

continued...

Control	Description
	Note: Always click **Clear** before **Start**. Stop—Terminates transaction performance analysis. TX and RX performance bars—Show the percentage of maximum theoretical data rate that the requested transactions are able to achieve.

4.4.7. The FMC A Tab

This tab allows you to perform loopback tests on the FMC A port.

Figure 22. The FMC A Tab

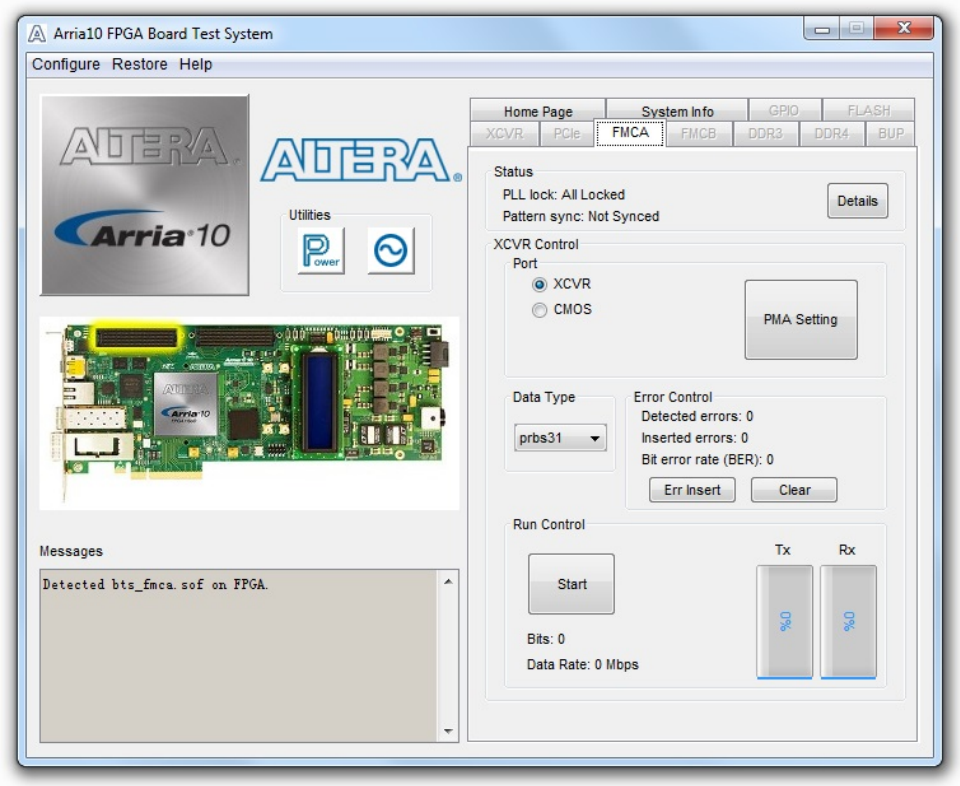

Control	Description
Status	Displays the following status information during a loopback test: PLL lock—Shows the PLL locked or unlocked state. Pattern sync—Shows the pattern synced or not synced state. The pattern is considered synced when the start of the data sequence is detected.

continued...

Control	Description
	Details—Shows the PLL lock and pattern sync status: 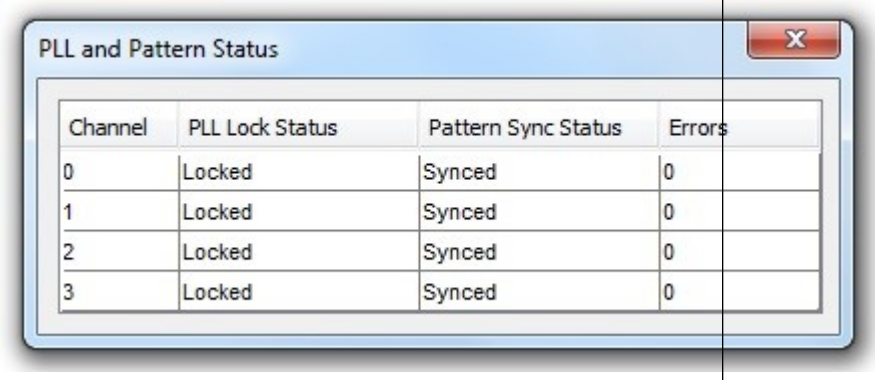
Port	Allows you to specify which interface to test. The following port tests are available: XCVR CMOS
PMA Setting	Allows you to make changes to the PMA parameters that affect the active transceiver interface. The following settings are available for analysis: Serial Loopback—Routes signals between the transmitter and the receiver. VOD—Specifies the voltage output differential of the transmitter buffer. Pre-emphasis tap • 1st pre—Specifies the amount of pre-emphasis on the pre-tap of the transmitter buffer. • 2nd pre—Specifies the amount of pre-emphasis on the second pre-tap of the transmitter buffer. • 1st post—Specifies the amount of pre-emphasis on the first post tap of the transmitter buffer. • 2nd post—Specifies the amount of pre-emphasis on the second post tap of the transmitter buffer. Equalizer—Specifies the AC gain setting for the receiver equalizer in four stage mode. DC gain—Specifies the DC gain setting for the receiver equalizer in four stage mode. VGA—Specifies the VGA gain value. All PMA settings should be changed as in Figure 20 on page 33.
Data Type	Specifies the type of data contained in the transactions. The following data types are available for analysis: • PRBS 7—Selects pseudo-random 7-bit sequences. • PRBS 15—Selects pseudo-random 15-bit sequences. • PRBS 23—Selects pseudo-random 23-bit sequences. • PRBS 31—Selects pseudo-random 31-bit sequences. • HF—Selects highest frequency divide-by-2 data pattern 10101010. • LF—Selects lowest frequency divide by 33 data pattern.
Error Control	Displays data errors detected during analysis and allows you to insert errors:

continued...

Control	Description
	• Detected errors—Displays the number of data errors detected in the hardware. • Inserted errors—Displays the number of errors inserted into the transmit data stream. • Insert Error—Inserts a one-word error into the transmit data stream each time you click the button. Insert Error is only enabled during transaction performance analysis. • Clear—Resets the Detected errors and Inserted errors counters to zeroes.
Loopback	Start—Initiates the selected ports transaction performance analysis. *Note:* Always click **Clear** before **Start**. Stop—Terminates transaction performance analysis. TX and RX performance bars—Show the percentage of maximum theoretical data rate that the requested transactions are able to achieve.

4.4.8. The FMC B Tab

This tab allows you to perform loopback tests on the FMC B port.

Figure 23. The FMC B Tab

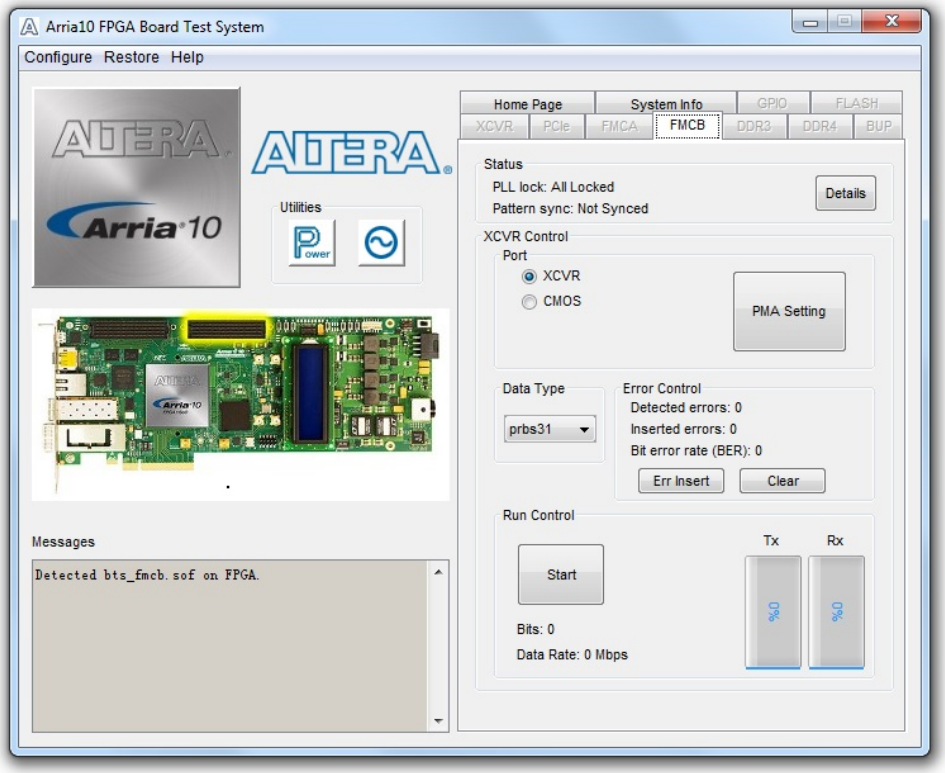

Control	Description
Status	Displays the following status information during a loopback test: PLL lock—Shows the PLL locked or unlocked state. Pattern sync—Shows the pattern synced or not synced state. The pattern is considered synced when the start of the data sequence is detected.

continued...

Control	Description
	Details—Shows the PLL lock and pattern sync status: 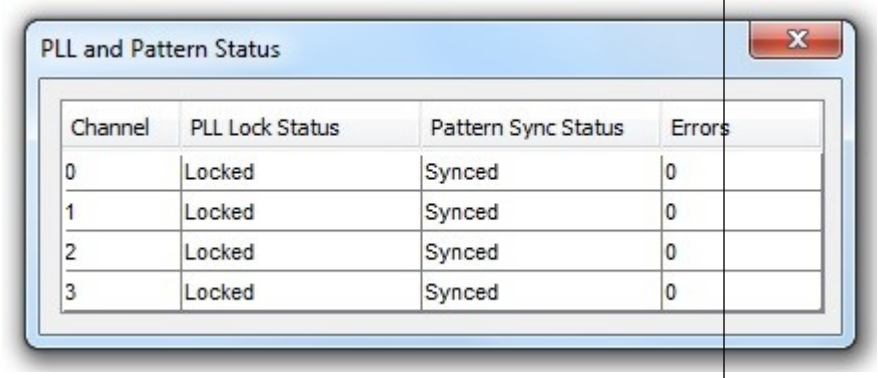
Port	Allows you to specify which interface to test. The following port tests are available: XCVR CMOS
PMA Setting	Allows you to make changes to the PMA parameters that affect the active transceiver interface. The following settings are available for analysis: Serial Loopback—Routes signals between the transmitter and the receiver. VOD—Specifies the voltage output differential of the transmitter buffer. Pre-emphasis tap • 1st pre—Specifies the amount of pre-emphasis on the pre-tap of the transmitter buffer. • 2nd pre—Specifies the amount of pre-emphasis on the second pre-tap of the transmitter buffer. • 1st post—Specifies the amount of pre-emphasis on the first post tap of the transmitter buffer. • 2nd post—Specifies the amount of pre-emphasis on the second post tap of the transmitter buffer. Equalizer—Specifies the AC gain setting for the receiver equalizer in four stage mode. DC gain—Specifies the DC gain setting for the receiver equalizer in four stage mode. VGA—Specifies the VGA gain value. All PMA settings should be changed as in Figure 20 on page 33.
Data Type	Specifies the type of data contained in the transactions. The following data types are available for analysis: • PRBS 7—Selects pseudo-random 7-bit sequences. • PRBS 15—Selects pseudo-random 15-bit sequences. • PRBS 23—Selects pseudo-random 23-bit sequences. • PRBS 31—Selects pseudo-random 31-bit sequences. • HF—Selects highest frequency divide-by-2 data pattern 10101010. • LF—Selects lowest frequency divide by 33 data pattern.
Error Control	Displays data errors detected during analysis and allows you to insert errors:

continued...

Control	Description
	• Detected errors—Displays the number of data errors detected in the hardware. • Inserted errors—Displays the number of errors inserted into the transmit data stream. • Insert Error—Inserts a one-word error into the transmit data stream each time you click the button. Insert Error is only enabled during transaction performance analysis. • Clear—Resets the Detected errors and Inserted errors counters to zeroes.
Loopback	Start—Initiates the selected ports transaction performance analysis. *Note:* Always click **Clear** before **Start**. Stop—Terminates transaction performance analysis. TX and RX performance bars—Show the percentage of maximum theoretical data rate that the requested transactions are able to achieve.

4.4.9. The DDR3 Tab

This tab allows you to read and write DDR3 memory on your board.

Figure 24. The DDR3 Tab

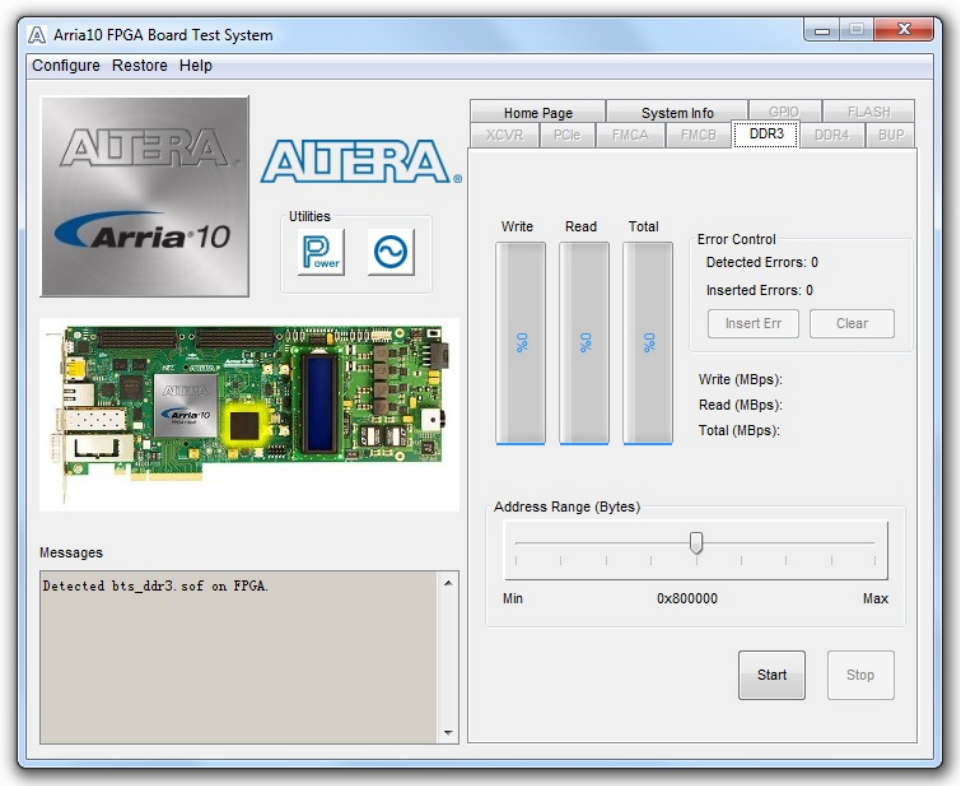

Control	Description
Start	Initiates DDR3 memory transaction performance analysis.
Stop	Terminates transaction performance analysis.
Performance Indicators	These controls display current transaction performance analysis information collected since you last clicked **Start**: • **Write**, **Read**, and **Total** performance bars—Show the percentage of maximum theoretical data rate that the requested transactions are able to achieve. • **Write (MBps)**, **Read (MBps)**, and **Total (MBps)**—Show the number of bytes of data analyzed per second. • Data bus: 72 bits (8 bits ECC) wide and the frequency is 1066 MHz double data rate. 2133 Megabits per second (Mbps) per pin. Equating to a theoretical maximum bandwidth of 136512 Mbps or 17064 MBps.
Error Control	This control displays data errors detected during analysis and allows you to insert errors:

continued...

Control	Description
	• **Detected errors**—Displays the number of data errors detected in the hardware. • **Inserted errors**—Displays the number of errors inserted into the transaction stream. • **Insert Error**—Inserts a one-word error into the transaction stream each time you click the button. Insert Error is only enabled during transaction performance analysis. • **Clear**—Resets the Detected errors and Inserted errors counters to zeroes.
Number of Addresses to Write and Read	Determines the number of addresses to use in each iteration of reads and writes.

4.4.10. The DDR4 Tab

This tab allows you to read and write DDR4 memory on your board.

Figure 25. The DDR4 Tab

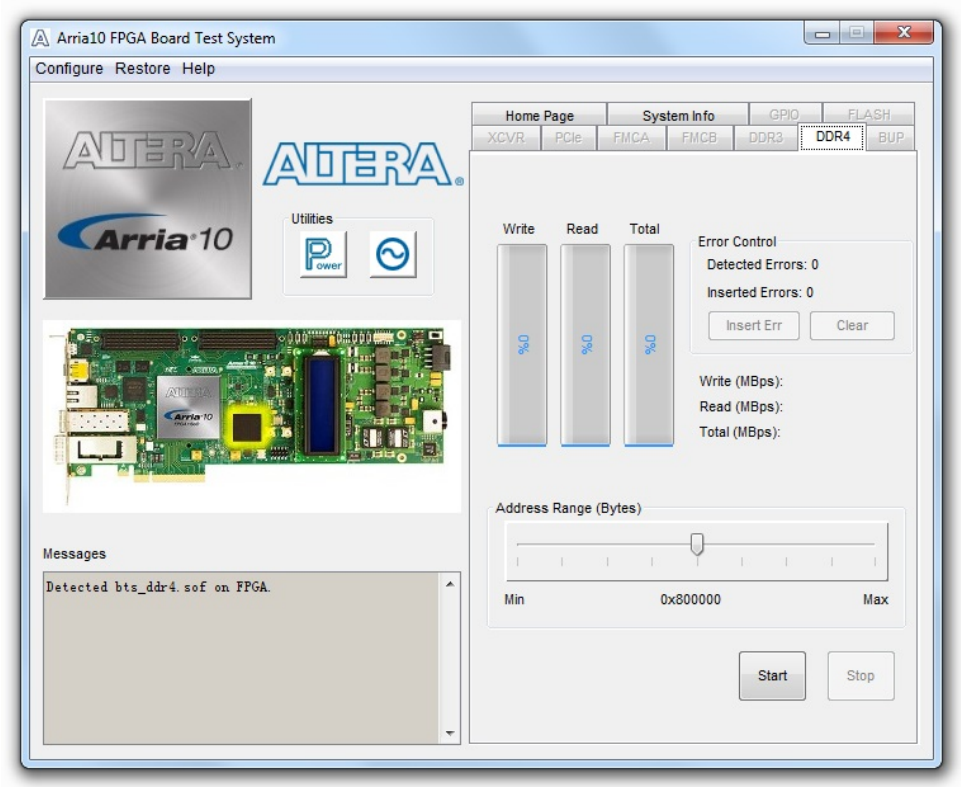

Control	Description
Start	Initiates DDR4 memory transaction performance analysis.
Stop	Terminates transaction performance analysis.
Performance Indicators	These controls display current transaction performance analysis information collected since you last clicked **Start**: • **Write**, **Read**, and **Total** performance bars—Show the percentage of maximum theoretical data rate that the requested transactions are able to achieve. • **Write (MBps)**, **Read (MBps)**, and **Total (MBps)**—Show the number of bytes of data analyzed per second. • Data bus: 72 bits (8 bits ECC) wide and the frequency is 1066 MHz double data rate. 2133 Megabits per second (Mbps) per pin. Equating to a theoretical maximum bandwidth of 136512 Mbps or 17064 MBps.
Error Control	This control displays data errors detected during analysis and allows you to insert errors:

continued...

Control	Description
	• **Detected errors**—Displays the number of data errors detected in the hardware. • **Inserted errors**—Displays the number of errors inserted into the transaction stream. • **Insert Error**—Inserts a one-word error into the transaction stream each time you click the button. Insert Error is only enabled during transaction performance analysis. • **Clear**—Resets the Detected errors and Inserted errors counters to zeroes.
Number of Addresses to Write and Read	Determines the number of addresses to use in each iteration of reads and writes.

4.4.11. The Power Monitor

The Power Monitor measures and reports current power information and communicates with the MAX V device on the board through the JTAG bus. A power monitor circuit attached to the MAX V device allows you to measure the power that the FPGA is consuming.

To start the application, click the Power Monitor icon in the Board Test System application. You can also run the Power Monitor as a stand-alone application. The `PowerMonitor.exe` resides in the `<package dir>\examples\board_test_system` directory.

Note: You cannot run the stand-alone power application and the BTS application at the same time. Also, you cannot run power and clock interface at the same time

Figure 26. Power Monitor Interface

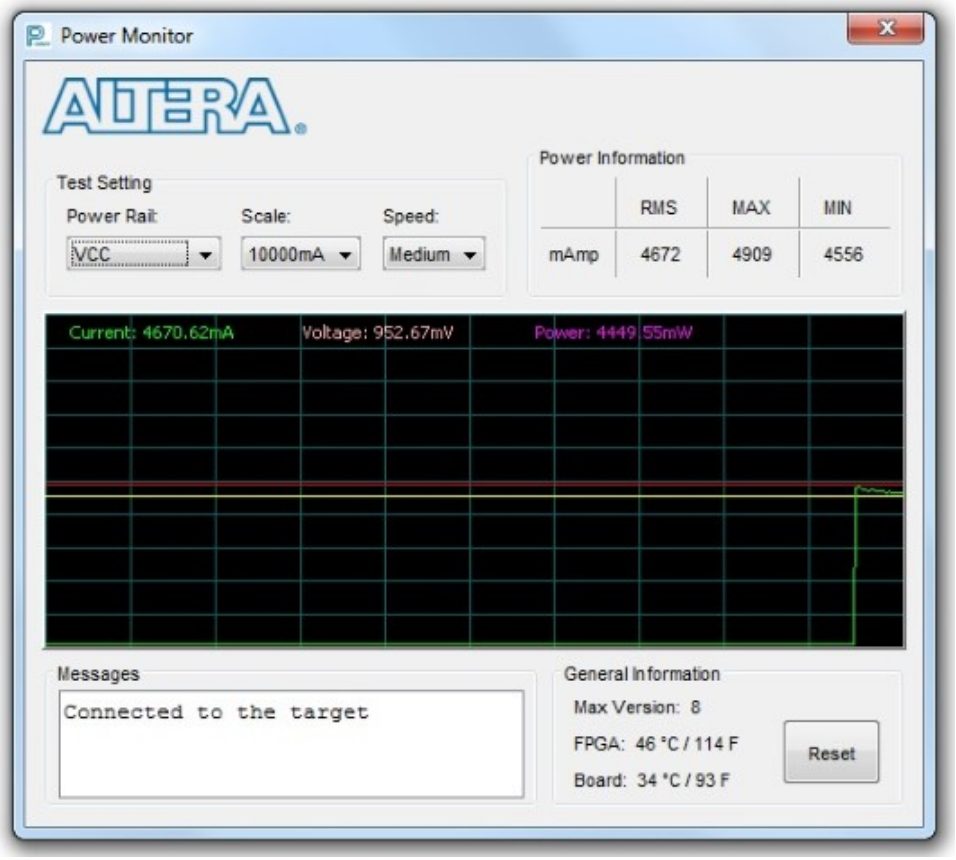

Control	Description
Test Settings	Displays the following controls: **Power Rail**—Indicates the currently-selected power rail. After selecting the desired rail, click **Reset** to refresh the screen with updated board readings.

continued...

Control	Description
	Scale—Specifies the amount to scale the power graph. Select a smaller number to zoom in to see finer detail. Select a larger number to zoom out to see the entire range of recorded values. **Speed**—Specifies how often to refresh the graph.
Power Information	Displays root-mean-square (RMS) current, maximum, and minimum numerical power readings in mA.
Graph	Displays the mA power consumption of your board over time. The green line indicates the current value. The red line indicates the maximum value read since the last reset. The yellow line indicates the minimum value read since the last reset.
General Information	Displays MAX V version and current temperature of the FPGA and board.
Reset	Clears the graph, resets the minimum and maximum values, and restarts the Power Monitor.

4.4.12. The Clock Control

The Clock Control application set the three programmable oscillators to any frequency between 10 MHz and 810 MHz. The frequencies support eight digits of precision to the right of the decimal point.

The Clock Control communicates with the MAX V device on the board through the JTAG bus. The programmable oscillators are connected to the MAX V device through a 2-wire serial bus.

Figure 27. Si570 (X3) Tab

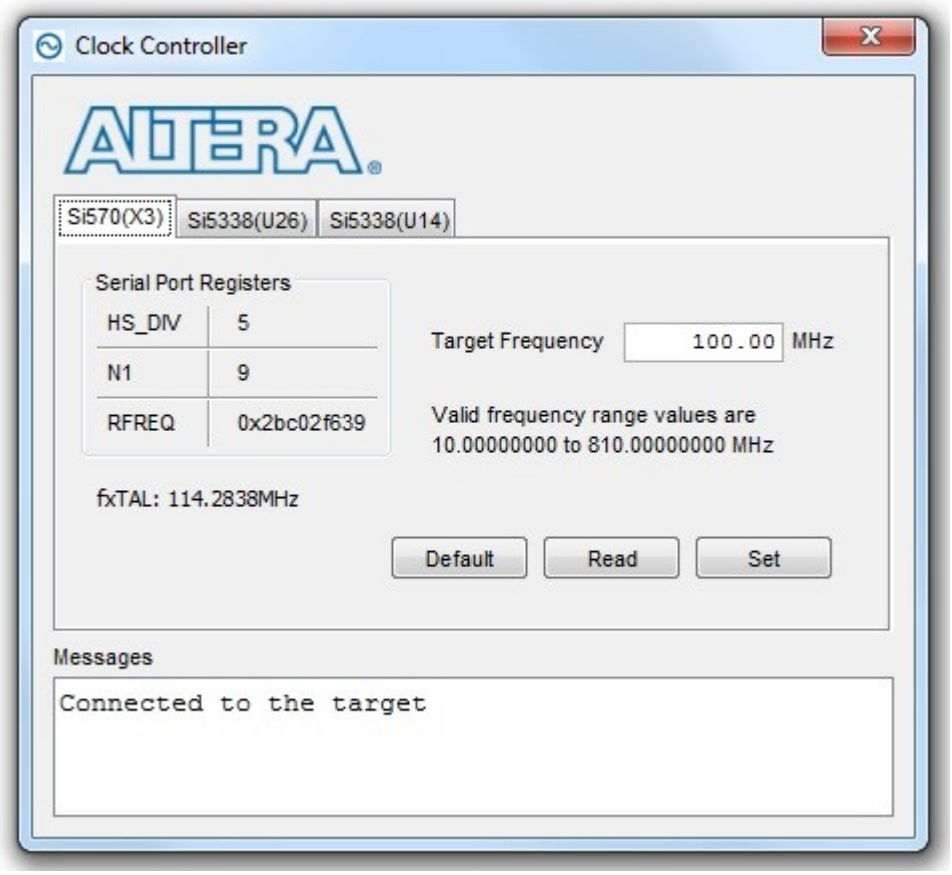

Control	Description
Serial Port Registers	Shows the current values from the Si570 registers for frequency configuration.
Target frequency (MHZ)	Allows you to specify the frequency of the clock. Legal values are between 10 and 810 MHz with eight digits of precision to the right of the decimal point. For example, 421.31259873 is possible within 100 parts per million (ppm). The **Target frequency** control works in conjunction with the **Set New Freq** control.

continued...

Control	Description
fXTAL	Shows the calculated internal fixed-frequency crystal, based on the serial port register values.
Default	Sets the frequency for the oscillator associated with the active tab back to its default value. This can also be accomplished by power cycling the board.
Set New Freq	Sets the programmable oscillator frequency for the selected clock to the value in the **Target frequency** control for the programmable oscillators. Frequency changes might take several milliseconds to take effect. You might see glitches on the clock during this time. Altera recommends resetting the FPGA logic after changing frequencies.

Each Si5338 tab for U26 and U14 display the same GUI controls for each clock generators. Each tab allows for separate control. The Si5338 is capable of synthesizing four independent user-programmable clock frequencies up to 350 MHz and select frequencies up to 710 MHz.

Figure 28. Si5338 (U26) Tab

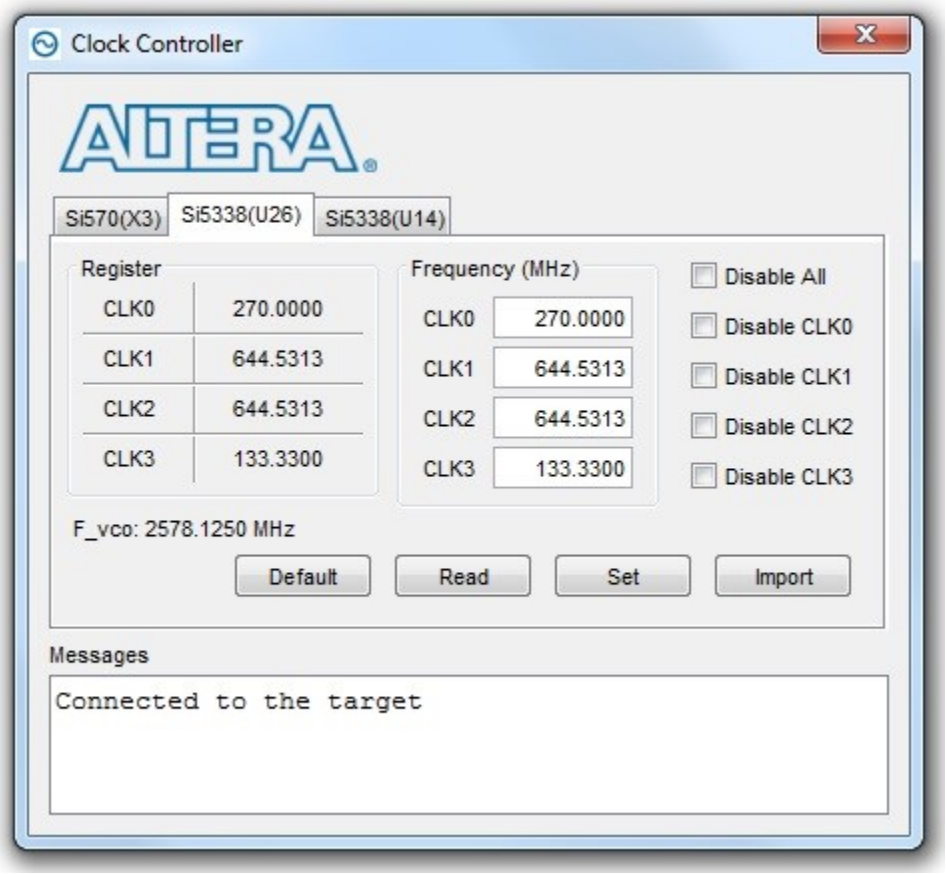

Figure 29. Si5338 (U14) Tab

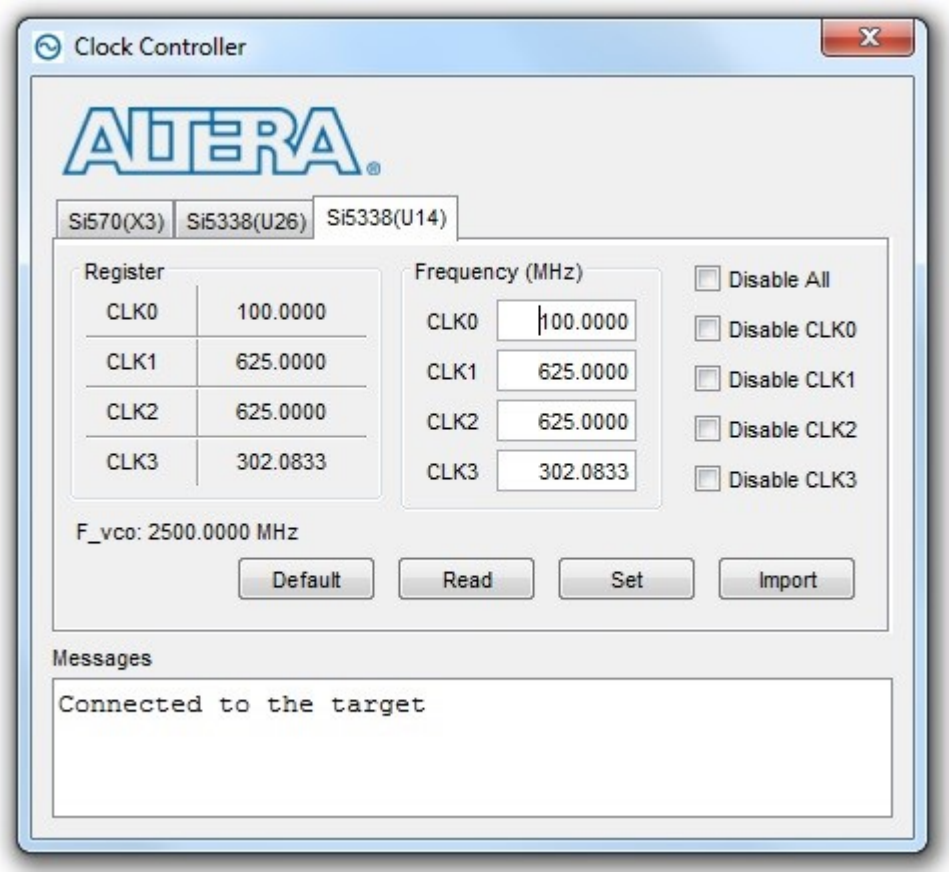

Control	Description
F_vco	Displays the generating signal value of the voltage-controlled oscillator.
Registers	Display the current frequencies for each oscillator.
Frequency (MHz)	Allows you to specify the frequency of the clock.
Disable all	Disable all oscillators at once.
Read	Reads the current frequency setting for the oscillator associated with the active tab.
Default	Sets the frequency for the oscillator associated with the active tab back to its default value. This can also be accomplished by power cycling the board.
Set New Freq	Sets the programmable oscillator frequency for the selected clock to the value in the CLK0 to CLK3 controls for the Si5338 (U26 and U14). Frequency changes might take several milliseconds to take effect. You might see glitches on the clock during this time. Altera recommends resetting the FPGA logic after changing frequencies.
Import Reg Map	Import register map file generated from Silicon Laboratories ClockBuilder Desktop.

5. Board Update Portal

The Arria 10 GX FPGA Development Kit ships with the Board Update Portal design example stored in the factory portion of the flash memory. The design consists of a Nios II embedded processor, an Ethernet MAC, and an HTML web server.

When you power up the board with SW6.4 FACTORY_LOAD in the default position, the Arria 10 GX FPGA configures with the Board Update Portal design example. The design can obtain an IP address from any DHCP server and serve a web page from the flash on your board to any host computer on the same network. The web page allows you to upload new FPGA designs to the user portion of the flash memory and provides links to useful information on the Altera website, including kit-specific links and design resources.

After successfully updating the user flash memory, you can load the user design from the flash memory into the FPGA. To do so, set SW6.4 to OFF position and power cycle the board.

The source code for the Board Update Portal design resides in the `<package dir>\examples\board_update_portal` directory. If the Board Update Portal is corrupted or deleted from the flash memory, refer to the "Factory Reset" section for information on how to restore the boards original factory contents.

Related Information

Factory Reset on page 18

Intel Corporation. All rights reserved. Intel, the Intel logo, and other Intel marks are trademarks of Intel Corporation or its subsidiaries. Intel warrants performance of its FPGA and semiconductor products to current specifications in accordance with Intel's standard warranty, but reserves the right to make changes to any products and services at any time without notice. Intel assumes no responsibility or liability arising out of the application or use of any information, product, or service described herein except as expressly agreed to in writing by Intel. Intel customers are advised to obtain the latest version of device specifications before relying on any published information and before placing orders for products or services.
*Other names and brands may be claimed as the property of others.

ISO 9001:2015 Registered

5.1. Connecting to the Board Update Portal Web Page

This section provides instructions to connect to the Board Update Portal web page. Before you proceed, ensure that you have the following:

- A PC with a connection to a working Ethernet port on a DHCP enabled network.
- A separate working Ethernet port connected to the same network for the board.
- The Ethernet cable, power cables, and development board that are included in the kit.

To connect to the Board Update Portal web page, perform these steps:

1. Install the latest Altera software tools, including the Quartus Prime software, Nios II processor and IP functions. If necessary, download the Quartus Prime Lite Edition software.
2. With the board powered down, set SW6.4 to the ON position.
3. Attach the Ethernet cable from the board to your LAN.
4. Power up the board. The board connects to the LAN's gateway router and obtains an IP address. The LCD on the board will display the IP address.
5. Launch a web browser on the PC that is connected to the same network, and enter the IP address from the LCD into the browser address bar. The Board Update Portal web page will appear in the browser.

You can click Arria 10 GX FPGA Development Kit on the Board Update Portal web page to access the kit's home page for documentation updates and additional new designs.

You can also navigate directly to the Arria 10 GX FPGA Development Kit page of the Altera website to determine if you have the latest kit software.

Related Information

- Quartus Prime Software Page
- Arria 10 GX FPGA Development Kit Web Page

5.1.1. Using the Board Update Portal to Update User Designs

The Board Update Portal allows you to write new designs to the user portion of the flash memory. Designs must be in the Nios II Flash Programmer File (**.flash)** format.

Design files available from the Arria 10 GX FPGA Development Kit page include **.flash** files. You can also create **.flash** files from your own custom designs.

To upload a design over the network into the user portion of the flash memory on your board, perform the following steps:

1. Perform the steps in "Connecting to the Board Update Portal Web Page" section to access the Board Update Portal web page.
2. In the **Hardware File Name** field specify the **.flash** file that you either downloaded from the Altera website or created on your own. If there is a software component to the design, specify it in the same manner using the **Software File Name** field or otherwise leave the field blank.
3. Click **Upload**. The progress bar indicates the percent complete. The file will take about 20 seconds to upload.
4. To configure the FPGA with the new design after the flash memory upload process is complete, set SW6.4 to the OFF position.

As long as you don't overwrite the factory image in the flash memory device, you can continue to use the Board Update Portal to write new designs to the user portion of the flash memory. If you do overwrite the factory image, you can restore it by following the instructions in the "Factory Reset" section.

Related Information

Factory Reset on page 18

6. Board Components

This chapter introduces all the important components on the development kit board.

A complete set of schematics, a physical layout database, and GERBER files for the development board reside in the development kit documents directory.

6.1. Board Overview

This section provides an annotated board image and the major component descriptions.

Figure 30. Overview of the Development Board Features (ES Edition)

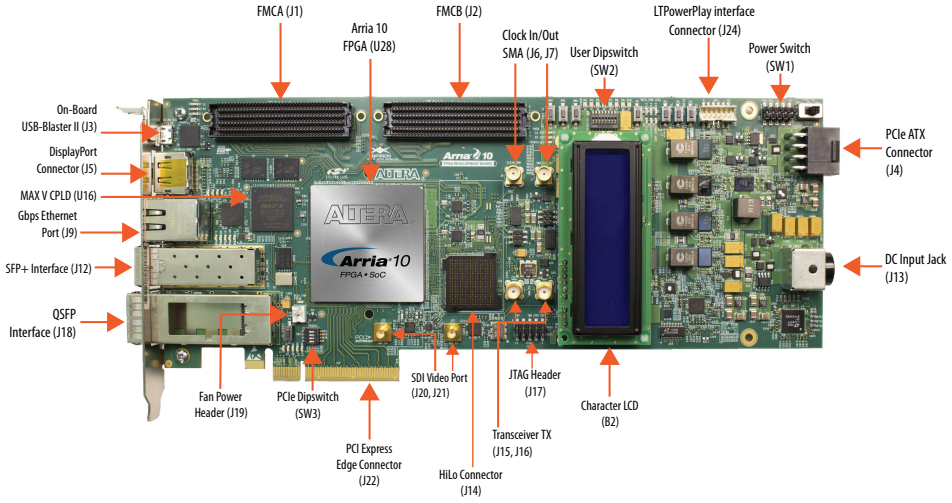

Intel Corporation. All rights reserved. Intel, the Intel logo, and other Intel marks are trademarks of Intel Corporation or its subsidiaries. Intel warrants performance of its FPGA and semiconductor products to current specifications in accordance with Intel's standard warranty, but reserves the right to make changes to any products and services at any time without notice. Intel assumes no responsibility or liability arising out of the application or use of any information, product, or service described herein except as expressly agreed to in writing by Intel. Intel customers are advised to obtain the latest version of device specifications before relying on any published information and before placing orders for products or services.
*Other names and brands may be claimed as the property of others.

ISO 9001:2015 Registered

Figure 31. Overview of the Development Board Features

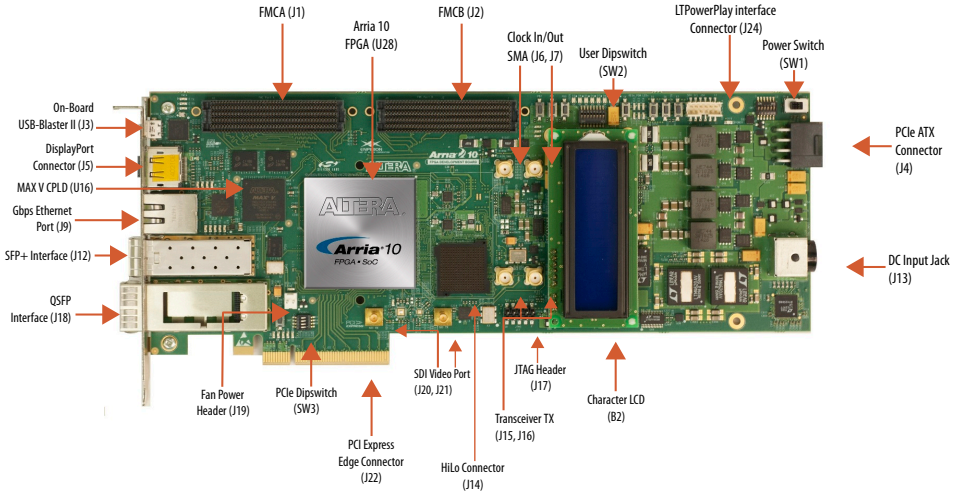

Table 15. Arria 10 GX FPGA Development Board Components

Board Reference	Type	Description
Featured Devices		
U28	FPGA	Arria 10 GX FPGA, 10AX115S2F45I1SG: • Adaptive logic modules (ALMs): 427,200 • LEs (K): 1,150 • Registers: 1,708,800 • M20K memory blocks: 2,713 • Transceiver count: 96 • Package Type: 1932 BGA
U16	CPLD	MAX V CPLD, 2210 LEs, 256FBGA 1.8V VCCINT

Board Reference	Type	Description
Configuration and Setup Elements		
J3	On-Board USB-Blaster II	Micro-USB 2.0 connector for programming and debugging the FPGA.
SW3	PCI Express Control DIP switch	Enables PCI Express link widths x1, x4, and x8.
SW4	JTAG Bypass DIP switch	Enables and disables devices in the JTAG chain. This switch is located on the back of the board.
SW5	FPP Configuration DIP Switch	Sets the Arria 10 MSEL pins and VID_EN pin.
SW6	Board settings DIP switch	Controls the MAX V CPLD System Controller functions such as clock select, clock enable, factory or user design load from flash and FACTORY signal command sent at power up. This switch is located at the bottom of the board.
S4	CPU reset push button	The default reset for the FPGA logic.

continued...

Board Reference	Type	Description
Configuration and Setup Elements		
S5	Image select push button	Toggles the configuration LEDs which selects the program image that loads from flash memory to the FPGA.
S6	Program configuration push button	Configures the FPGA from flash memory image based on the program LEDs.
S7	MAX V reset push button	The default reset for the MAX V CPLD System Controller.

Board Reference	Type	Description
Status Elements		
D22, D23	JTAG LEDs	Indicates transmit or receive activity of the JTAG chain. The TX and RX LEDs flicker if the link is in use and active.
D24, D25	System Console LEDs	Indicates the transmit or receive activity of the System Console USB interface. The TX and RX LEDs would flicker if the link is in use and active. The LEDs are either off when not in use or on when in use but idle.
D12, D13, D14	Program LEDs	Illuminates to show the LED sequence that determines which flash memory image loads to the FPGA when you press the program load push button.
D17	Configuration done LED	Illuminates when the FPGA is configured.
D15	Load LED	Illuminates during FPGA configuration.
D16	Error LED	Illuminates when the FPGA configuration from flash fails.
D19	Power LED	Illuminates when the board is powered on.
D32	Temperature LED	Illuminates when an over temperature condition occurs for the FPGA device. Ensure that an adequate heatsink/fan is properly installed..
D26, D27, D28, D29, D30	Ethernet LEDs	Shows the connection speed as well as transmit or receive activity.
D33	SDI Cable LED	Illuminates to show the transmit or receive activity.
D34, D35, D36, D37, D38	PCI Express link LEDs	You can configure these LEDs to display the PCI Express link width (x1, x4, x8) and data rate.
D3, D4, D5, D6, D7, D8, D9, D10	User defined LEDs	Eight bi-color LEDs (green and red) for 16 user LEDs. Illuminates when driven low.
D1, D2, D11	FMCA LEDs	Illuminates for RX, TX, PRSNTn activity.
D18, D20, D21	FMCB LEDs	Illuminates for RX, TX, PRSNTn activity.

Board Reference	Type	Description
Clock Circuitry		
X1	SDI reference clock	SW6.3 DIP switch controlled: FS=0: 148.35 MHz FS=1: 148.50 MHz
X3	Programmable oscillator	Si570 programmable oscillator by the clock control GUI. Default is 100 MHz.
X2	125.0-MHz oscillator	125.0-MHz voltage controlled crystal oscillator for the Ethernet interface..

continued...

Board Reference	Type	Description
Clock Circuitry		
X4	50-MHz oscillator	50.000-MHz crystal oscillator for general purpose logic.
U26	Quad-output oscillator	Si5338 programmable oscillator for clock control GUI. (Defaults CLK[0:3] = 270MHz, 644.53125MHz, 644.53125MHz, 133.33MHz)
U14	Quad-output oscillator	Si5338 programmable oscillator for clock control GUI. (Defaults CLK[0:3] = 100MHz, 625MHz, 625MHz, 302.083333MHz)
J6	Clock input SMA connector	Signal: CLKIN_SMA
J7	Clock output SMA connector	Signal: SMA_CLK_OUT
J20, J21	SDI (Serial Digital Interface) transceiver connectors	Two sub-miniature version B (SMB) connectors. Drives serial data input/output to or from SDI video port.

Board Reference	Type	Description
Transceiver Interfaces		
J15	SMA connector	SMA_TX_N from the left transceiver bank - 1H
J16	SMA connector	SMA_TX_P from the left transceiver bank - 1H

Board Reference	Type	Description
General User Input/Output		
SW2	FPGA user DIP switch	Octal user DIP switches. When the switch is ON, a logic 0 is selected.
S1, S2, S3	General user push buttons	Three user push buttons. Driven low when pressed.
D3, D4, D5, D6, D7, D8, D9, D10	User defined LEDs	Eight bi-color user LEDs. Illuminates when driven low.

Board Reference	Type	Description
Memory Devices		
J14	HiLo Connector	One x72 memory interface supporting DDR3 (x72), DDR4 (x72), QDR4 (x36), and RLDRAM 3 (x36). This development kit includes three plugin modules (daughtercards) that use the HiLo connector: • DDR4 memory (x72) 1200 MHz • DDR3 memory (x72) 1066 MHz, Ping Pong PHY. • RLDRAM3 memory (x36) 1,200 MHz
U4, U5	Flash memory	ICS - 1GBIT STRATA FLASH, 16-BIT DATA, VCC=VCCQ=1.7V-2.0V, 64-BALL EASY BGA (10MM X 8MM)

Board Reference	Type	Description
Communication Ports		
J22	PCI Express x8 edge connector	Made of gold-plated edge fingers for up to ×8 signaling in either Gen1, Gen2, or Gen3 mode.
J1, J2	FMC Port	FPGA mezzanine card ports A and B.

continued...

Board Reference	Type	Description
Communication Ports		
J9	Gbps Ethernet RJ-45 connector	RJ-45 connector which provides a 10/100/1000 Ethernet connection via a Marvell 88E1111 PHY and the FPGA-based Altera Triple Speed Ethernet MAC MegaCore function in SGMII mode.
J18	QSFP interface	Provides four transceiver channels for a 40G QSFP module.
J12	SFP+ connector	SFP+ XCVR interface.
J3	Micro-USB connector	Embedded Altera USB-Blaster II JTAG for programming the FPGA via a USB cable.

Board Reference	Type	Description
Display Ports		
J5	DisplayPort connector	Molex 0.50mm pitch DisplayPort male receptacle, right angle, surface mount, 0.76µm gold plating, 20 circuits with cover.
B2	Character LCD	Connector which interfaces to the provided 16 character × 2 line LCD module.
J20, J21	SDI video port	Two sub-miniature version B (SMB) connectors that provide a full-duplex SDI interface.

Board Reference	Type	Description
Power Supply		
J22	PCI Express edge connector	Interfaces to a PCI Express root port such as an appropriate PC motherboard.
J13	DC input jack	Accepts a 12-V DC power supply. Do not use this input jack while the board is plugged into a PCI Express slot.
SW1	Power Switch	Switch to power on or off the board when power is supplied from the DC input jack.
J4	PCIe 2x4 ATX power connector	12-V ATX input. This input must be connected when the board is plugged into a PCIe root port.

6.2. MAX V CPLD System Controller

The board utilizes the EPM2210 System Controller, an Altera MAX V CPLD, for the following purposes:

- FPGA configuration from flash memory
- Power consumption monitoring
- Temperature monitoring
- Fan control
- Control registers for clocks
- Control registers for remote update system

Table 16. MAX V CPLD System Controller Device Pin-Out

Schematic Signal Name	Pin Number	I/O Standard	Description
CLK125_EN	E9	2.5 V	125 MHz oscillator enable
CLK50_EN	J16	1.8 V	50 MHz oscillator enable
CLK_CONFIG	J5	1.8 V	Clock Configure
CLK_ENABLE	D4	2.5 V	Clock Enable
CLK_SEL	A2	2.5 V	Clock Select
CLOCK_I2C_SCL	C12	2.5 V	Serial clock line for I^2C
CLOCK_I2C_SDA	C10	2.5 V	Serial data line for I^2C
CPU_RESETN	K4	1.8 V	FPGA reset push button
FACTORY_LOAD	B5	2.5 V	DIP switch to load factory or user design at power-up
FLASH_ADVN	N14	1.8 V	FSM bus flash memory address valid
FLASH_CEN0	D14	1.8 V	FSM bus flash memory chip enable
FLASH_CEN1	F11	1.8 V	FSM bus flash memory chip enable
FLASH_CLK	N15	1.8 V	FSM bus flash memory clock
FLASH_OEN	P14	1.8 V	FSM bus flash memory output enable
FLASH_RDYBSYN0	F12	1.8 V	FSM bus flash memory ready
FLASH_RDYBSYN1	P15	1.8 V	FSM bus flash memory ready
FLASH_RESETN	D13	1.8 V	FSM bus flash memory reset
FLASH_WEN	J1	1.8 V	FSM bus flash memory write enable
FM_A1	F15	1.8 V	FM address bus
FM_A2	G16	1.8 V	FM address bus
FM_A3	G15	1.8 V	FM address bus
FM_A4	H16	1.8 V	FM address bus
FM_A5	H15	1.8 V	FM address bus
FM_A6	F16	1.8 V	FM address bus
FM_A7	G14	1.8 V	FM address bus
FM_A8	D16	1.8 V	FM address bus
FM_A9	E15	1.8 V	FM address bus
FM_A10	E16	1.8 V	FM address bus
FM_A11	H14	1.8 V	FM address bus
FM_A12	D15	1.8 V	FM address bus
FM_A13	F14	1.8 V	FM address bus
FM_A14	C14	1.8 V	FM address bus

continued...

Schematic Signal Name	Pin Number	I/O Standard	Description
FM_A15	C15	1.8 V	FM address bus
FM_A16	H3	1.8 V	FM address bus
FM_A17	H2	1.8 V	FM address bus
FM_A18	E13	1.8 V	FM address bus
FM_A19	F13	1.8 V	FM address bus
FM_A20	G13	1.8 V	FM address bus
FM_A21	G12	1.8 V	FM address bus
FM_A22	E12	1.8 V	FM address bus
FM_A23	J13	1.8 V	FM address bus
FM_A24	G5	1.8 V	FM address bus
FM_A25	H13	1.8 V	FM address bus
FM_A26	H4	1.8 V	FM address bus
FM_D0	J15	1.8 V	FM data bus
FM_D1	L16	1.8 V	FM data bus
FM_D2	L14	1.8 V	FM data bus
FM_D3	K14	1.8 V	FM data bus
FM_D4	L13	1.8 V	FM data bus
FM_D5	L15	1.8 V	FM data bus
FM_D6	M15	1.8 V	FM data bus
FM_D7	M16	1.8 V	FM data bus
FM_D8	K16	1.8 V	FM data bus
FM_D9	K15	1.8 V	FM data bus
FM_D10	J14	1.8 V	FM data bus
FM_D11	K13	1.8 V	FM data bus
FM_D12	L12	1.8 V	FM data bus
FM_D13	N16	1.8 V	FM data bus
FM_D14	M13	1.8 V	FM data bus
FM_D15	L11	1.8 V	FM data bus
FM_D16	E4	1.8 V	FM data bus
FM_D17	F6	1.8 V	FM data bus
FM_D18	F4	1.8 V	FM data bus
FM_D19	C2	1.8 V	FM data bus
FM_D20	D1	1.8 V	FM data bus
FM_D21	F1	1.8 V	FM data bus
FM_D22	E3	1.8 V	FM data bus
FM_D23	G2	1.8 V	FM data bus

continued...

Schematic Signal Name	Pin Number	I/O Standard	Description
FM_D24	E5	1.8 V	FM data bus
FM_D25	C3	1.8 V	FM data bus
FM_D26	D3	1.8 V	FM data bus
FM_D27	D2	1.8 V	FM data bus
FM_D28	E1	1.8 V	FM data bus
FM_D29	G3	1.8 V	FM data bus
FM_D30	F3	1.8 V	FM data bus
FM_D31	F2	1.8 V	FM data bus
FMCA_C2M_PG	R16	1.8 V	FMC port A power good output
FMCA_PRSNTN	G1	1.8 V	Green LED. Illuminates when the FMC port has a board or cable plugged-in. Driven by the add-in card.
FMCB_C2M_PG	L5	1.8 V	FMC port B power good output
FMCB_PRSNTN	E2	1.8 V	Green LED. Illuminates when the FMC port has a board or cable plugged-in. Driven by the add-in card.
FPGA_CONF_DONE	K1	1.8 V	FPGA configuration done LED
FPGA_CONFIG_D0	R1	1.8 V	FPGA configuration data
FPGA_CONFIG_D1	T2	1.8 V	FPGA configuration data
FPGA_CONFIG_D2	N6	1.8 V	FPGA configuration data
FPGA_CONFIG_D3	N5	1.8 V	FPGA configuration data
FPGA_CONFIG_D4	N7	1.8 V	FPGA configuration data
FPGA_CONFIG_D5	N8	1.8 V	FPGA configuration data
FPGA_CONFIG_D6	M12	1.8 V	FPGA configuration data
FPGA_CONFIG_D7	T13	1.8 V	FPGA configuration data
FPGA_CONFIG_D8	T15	1.8 V	FPGA configuration data
FPGA_CONFIG_D9	R13	1.8 V	FPGA configuration data
FPGA_CONFIG_D10	P4	1.8 V	FPGA configuration data
FPGA_CONFIG_D11	R3	1.8 V	FPGA configuration data
FPGA_CONFIG_D12	T10	1.8 V	FPGA configuration data
FPGA_CONFIG_D13	P5	1.8 V	FPGA configuration data
FPGA_CONFIG_D14	R4	1.8 V	FPGA configuration data
FPGA_CONFIG_D15	R5	1.8 V	FPGA configuration data
FPGA_CONFIG_D16	M8	1.8 V	FPGA configuration data
FPGA_CONFIG_D17	M7	1.8 V	FPGA configuration data
FPGA_CONFIG_D18	T5	1.8 V	FPGA configuration data

continued...

Schematic Signal Name	Pin Number	I/O Standard	Description
FPGA_CONFIG_D19	P9	1.8 V	FPGA configuration data
FPGA_CONFIG_D20	M6	1.8 V	FPGA configuration data
FPGA_CONFIG_D21	N9	1.8 V	FPGA configuration data
FPGA_CONFIG_D22	R8	1.8 V	FPGA configuration data
FPGA_CONFIG_D23	T8	1.8 V	FPGA configuration data
FPGA_CONFIG_D24	P7	1.8 V	FPGA configuration data
FPGA_CONFIG_D25	R7	1.8 V	FPGA configuration data
FPGA_CONFIG_D26	R9	1.8 V	FPGA configuration data
FPGA_CONFIG_D27	T9	1.8 V	FPGA configuration data
FPGA_CONFIG_D28	T7	1.8 V	FPGA configuration data
FPGA_CONFIG_D29	P8	1.8 V	FPGA configuration data
FPGA_CONFIG_D30	R6	1.8 V	FPGA configuration data
FPGA_CONFIG_D31	P6	1.8 V	FPGA configuration data
FPGA_CVP_CONFDONE	M14	1.8 V	FPGA Configuration via Protocol (CvP) done
FPGA_DCLK	M9	1.8 V	FPGA configuration clock
FPGA_NCONFIG	E14	1.8 V	FPGA configuration active
FPGA_NSTATUS	J4	1.8 V	FPGA configuration ready
FPGA_PR_DONE	H12	1.8 V	FPGA partial reconfiguration done
FPGA_PR_ERROR	K12	1.8 V	FPGA partial reconfiguration error
FPGA_PR_READY	P12	1.8 V	FPGA partial reconfiguration ready
FPGA_PR_REQUEST	T4	1.8 V	FPGA partial reconfiguration request
M5_JTAG_TCK	P3	1.8 V	JTAG chain clock
M5_JTAG_TDI	L6	1.8 V	JTAG chain data in
M5_JTAG_TDO	M5	1.8 V	JTAG chain data out
M5_JTAG_TMS	N4	1.8 V	JTAG chain mode
MAX5_BEN0	R10	1.8 V	MAX V Byte Enable 0
MAX5_BEN1	M10	1.8 V	MAX V Byte Enable 1
MAX5_BEN2	T12	1.8 V	MAX V Byte Enable 2
MAX5_BEN3	P10	1.8 V	MAX V Byte Enable 3
MAX5_CLK	N11	1.8 V	MAX V Clock
MAX5_CSN	T11	1.8 V	MAX V chip select
MAX5_OEN	N10	1.8 V	MAX V output enable
MAX5_WEN	R11	1.8 V	MAX V Write enable

continued...

Schematic Signal Name	Pin Number	I/O Standard	Description
MAX_CONF_DONE	D7	2.5 V	On-board USB-Blaster II configuration done LED
MAX_ERROR	C7	2.5 V	FPGA configuration error LED
MAX_LOAD	B6	2.5 V	FPGA configuration active LED
MAX_RESETN	J3	1.8 V	MAX V reset push button
MSEL0	R12	1.8 V	FPGA MSEL0 setting
MSEL1	P11	1.8 V	FPGA MSEL1 setting
MSEL2	M11	1.8 V	FPGA MSEL2 setting
MV_CLK_50	J12	1.8 V	MAX V 50 MHz clock
OVERTEMP	E11	2.5 V	Temperature monitor fan enable
OVERTEMPN	B16	2.5 V	Temperature monitor fan enable
PGM_CONFIG	A6	2.5 V	Load the flash memory image identified by the PGM LEDs
PGM_LED0	D6	2.5 V	Flash memory PGM select indicator 0
PGM_LED1	C6	2.5 V	Flash memory PGM select indicator 1
PGM_LED2	B7	2.5 V	Flash memory PGM select indicator 2
PGM_SEL	A7	2.5 V	Toggles the PGM_LED[2:0] LED sequence
SDI_MF0_BYPASS	P13	1.8 V	SDI Interface Mode Select 0 / Bypass control
SDI_MF1_AUTO_SLEEP	R14	1.8 V	SDI Interface Mode Select 1 / Auto Sleep Control
SDI_MF2_MUTE	N12	1.8 V	SDI Interface Mode Select 2 / Output Mute
SDI_TX_SD_HDN	N13	1.8 V	SDI Interface TX Signal Detect
SENSE_CS0N	D9	2.5 V	SPI Interface Chip Select
SENSE_SCK	B9	2.5 V	SPI Interface Clock
SENSE_SDI	B3	2.5 V	SPI Interface Serial Data In
SENSE_SDO	C9	2.5 V	SPI Interface Serial Data Out
SENSE_SMB_CLK	A15	2.5 V	I_2C Interface Clock
SENSE_SMB_DATA	B13	2.5 V	I_2C Interface Data
SI516_FS	C5	2.5 V	Silicon Labs SI516 Clock Device Frequency Select

continued...

Schematic Signal Name	Pin Number	I/O Standard	Description
SI570_EN	A10	2.5 V	Si570 programmable clock enable
TSENSE_ALERTN	B14	2.5 V	MAX1619 device Temperature Sense Alert Signal
USB_CFG0	M4	1.8 V	On-board USB-Blaster II interface (reserved for future use)
USB_CFG1	M3	1.8 V	On-board USB-Blaster II interface (reserved for future use)
USB_CFG2	K2	1.8 V	On-board USB-Blaster II interface (reserved for future use)
USB_CFG3	K5	1.8 V	On-board USB-Blaster II interface (reserved for future use)
USB_CFG4	L1	1.8 V	On-board USB-Blaster II interface (reserved for future use)
USB_CFG5	L2	1.8 V	On-board USB-Blaster II interface (reserved for future use)
USB_CFG6	K3	1.8 V	On-board USB-Blaster II interface (reserved for future use)
USB_CFG7	M2	1.8 V	On-board USB-Blaster II interface (reserved for future use)
USB_CFG8	L4	1.8 V	On-board USB-Blaster II interface (reserved for future use)
USB_CFG9	L3	1.8 V	On-board USB-Blaster II interface (reserved for future use)
USB_CFG10	N1	1.8 V	On-board USB-Blaster II interface (reserved for future use)
USB_CFG11	N2	1.8 V	On-board USB-Blaster II interface (reserved for future use)
USB_CFG12	M1	1.8 V	On-board USB-Blaster II interface (reserved for future use)
USB_CFG13	N3	1.8 V	On-board USB-Blaster II interface (reserved for future use)
USB_CFG14	P2	1.8 V	On-board USB-Blaster II interface (reserved for future use)
USB_M5_CLK	H5	1.8 V	On-board USB-Blaster II interface clock

continued...

Schematic Signal Name	Pin Number	I/O Standard	Description
ED8101_ALERT	B8	2.5 V	ED8101 Alert signal
ED8101_SCL	A8	2.5 V	ED8101 I2C clock signal
ED8101_SDA	A9	2.5 V	ED8101 I2C data signal

6.3. FPGA Configuration

6.3.1. Configuring the FPGA Using Programmer

You can use the Quartus Programmer to configure the FPGA with your SRAM Object File (**.sof**).

Ensure the following:

- The Quartus Programmer and the USB-Blaster II driver are installed on the host computer.
- The micro-USB cable is connected to the FPGA development board.
- Power to the board is on, and no other applications that use the JTAG chain are running.

1. Start the Quartus Programmer.
2. Click **Auto Detect** to display the devices in the JTAG chain.
3. Click **Change File** and select the path to the desired `.sof`.
4. Turn on the **Program/Configure** option for the added file.
5. Click **Start** to download the selected file to the FPGA. Configuration is complete when the progress bar reaches 100%.

Using the Quartus Programmer to configure a device on the board causes other JTAG-based applications such as the Board Test System and the Power Monitor to lose their connection to the board. Restart those applications after configuration is complete.

6.4. Status Elements

The Arria 10 GX FPGA development board includes status LEDs.

Table 17. Board-Specific LEDs

Board Reference	Schematic Signal Name	I/O Standard
D16	MAX_ERROR	2.5 V
D15	MAX_LOAD	2.5 V
D17	MAX_CONF_DONE	2.5 V
D1	FMCA_TX_LED	1.8 V
D2	FMCA_RX_LED	1.8 V
D12	PGM_LED0	2.5 V
D13	PGM_LED1	2.5 V
D14	PGM_LED2	2.5 V

continued...

Board Reference	Schematic Signal Name	I/O Standard
D11	FMCA_PRSNTn	1.8 V
D18	FMCB_TX_LED	1.8 V
D20	FMCB_RX_LED	1.8 V
D21	FMCB_PRSNTn	1.8 V
D34	PCIE_LED_X1	1.8 V
D35	PCIE_LED_X4	1.8 V
D36	PCIE_LED_X8	1.8 V
D37	PCIE_LED_G2	1.8 V
D38	PCIE_LED_G3	1.8 V

6.5. User Input/Output

6.5.1. User-Defined Push Buttons

The Arria 10 GX FPGA development board includes user-defined push buttons. When you press and hold down the button, the device pin is set to logic 0; when you release the button, the device pin is set to logic 1. There are no board-specific functions for these general user push buttons.

Table 18. User-Defined Push Button Schematic Signal Names and Functions

Board Reference	Schematic Signal Name	FPGA Pin Number	I/O Standard
S1	USER_PB2	U11	1.8 V
S2	USER_PB1	U12	1.8 V
S3	USER_PB0	T12	1.8 V
S4	CPU_RESETn	BD27	1.8 V
S5	PGM_SEL	—	2.5 V
S6	PGM_CONFIG	—	2.5 V
S7	MAX_RESETn	—	2.5 V

6.5.2. User-Defined DIP Switch

The Arria 10 GX FPGA development board includes a set of eight-pin DIP switch. There are no board-specific functions for these switches. When the switch is in the OFF position, a logic 1 is selected. When the switch is in the ON position, a logic 0 is selected.

Table 19. User-Defined DIP Switch Schematic Signal Names and Functions

Board Reference	Schematic Signal Name	FPGA Pin Number	I/O Standard
1	USER_DIPSW0	A24	1.8-V
2	USER_DIPSW1	B23	1.8-V
3	USER_DIPSW2	A23	1.8-V
4	USER_DIPSW3	B22	1.8-V
5	USER_DIPSW4	A22	1.8-V
6	USER_DIPSW5	B21	1.8-V
7	USER_DIPSW6	C21	1.8-V
8	USER_DIPSW7	A20	1.8-V

6.5.3. User-Defined LEDs

The Arria 10 GX FPGA development board includes a set of eight pairs user-defined LEDs. The LEDs illuminate when a logic 0 is driven, and turns off when a logic 1 is driven. There are no board-specific functions for these LEDs.

Table 20. User-Defined LEDs Schematic Signal Names and Functions

Board Reference	Schematic Signal Name	FPGA Pin Number	I/O Standard
D10	USER_LED_G0	L28	1.8 V
D9	USER_LED_G1	K26	1.8 V
D8	USER_LED_G2	K25	1.8 V
D7	USER_LED_G3	L25	1.8 V
D6	USER_LED_G4	J24	1.8 V
D5	USER_LED_G5	A19	1.8 V
D4	USER_LED_G6	C18	1.8 V
D3	USER_LED_G7	D18	1.8 V
D10	USER_LED_R0	L27	1.8 V
D9	USER_LED_R1	J26	1.8 V
D8	USER_LED_R2	K24	1.8 V
D7	USER_LED_R3	L23	1.8 V
D6	USER_LED_R4	B20	1.8 V
D5	USER_LED_R5	C19	1.8 V
D4	USER_LED_R6	D19	1.8 V
D3	USER_LED_R7	M23	1.8 V

6.5.4. Character LCD

The Arria 10 GX FPGA development board includes a single 10-pin 0.1" pitch single-row header that interfaces to a 16 character × 2 line Lumex LCD display. The LCD has a 10-pin receptacle that mounts directly to the board's 10-pin header, so it can be easily removed for access to components under the display. You can also use the header for debugging or other purposes.

Table 21. Character LCD Schematic Signal Names and Functions

Board Reference	Schematic Signal Name	FPGA Pin Number	I/O Standard	Description
5	SPI_SS_DISP / DISP_SPISS	BA35	1.8 V	SPI slave select (only used in SPI mode)
7	I2C_SCL_DISP / DISP_I2C_SCL	AW33	1.8 V	I^2C LCD serial clock
8	I2C_SDA_DISP / DISP_I2C_SDA	AY34	1.8 V	I^2C LCD serial data

6.5.5. DisplayPort

The Arria 10 GX FPGA development board includes a DisplayPort connector.

Table 22. DisplayPort Schematic Signal Names and Functions

Board Reference	Schematic Signal Name	FPGA Pin Number	I/O Standard	Description
13	DP_3P3V_CONFIG 1	AK31	1.8 V	—
14	DP_3P3V_CONFIG 2	AK32	1.8 V	—
18	DP_3P3V_HOT_PL UG	AM30	1.8 V	Hot plug detect
17	DP_AUX_CN	AM35	LVDS	Auxiliary channel (negative)
15	DP_AUX_CP	AN34	LVDS	Auxiliary channel (positive)
3	DP_ML_LANE_CN 0	AP43	High Speed Differential I/O	Lane 0 (negative)
6	DP_ML_LANE_CN 1	AM43	High Speed Differential I/O	Lane 1 (negative)
9	DP_ML_LANE_CN 2	AH43	High Speed Differential I/O	Lane 2 (negative)
12	DP_ML_LANE_CN 3	AF43	High Speed Differential I/O	Lane 3 (negative)
1	DP_ML_LANE_CP0	AP44	High Speed Differential I/O	Lane 0 (positive)
4	DP_ML_LANE_CP1	AM44	High Speed Differential I/O	Lane 1 (positive)
7	DP_ML_LANE_CP2	AH44	High Speed Differential I/O	Lane 2 (positive)
10	DP_ML_LANE_CP3	AF44	High Speed Differential I/O	Lane 3 (positive)
19	DP_RTN	AL33	High Speed Differential I/O	Return for power

6.5.6. SDI Video Input/Output Ports

The Arria 10 GX FPGA development board includes a SDI video port, which consists of a M23428G-33 cable driver and a M23544G-14 cable equalizer. The PHY devices from Macom interface to single-ended SMB connectors.
The cable driver supports operation from 125 Mbps to 11.88 Gbps. Control signals are allowed for SD and HD modes selections, as well as device enable. The device can be clocked by the 148.5 MHz voltage-controlled crystal oscillator (VCXO) and matched to incoming signals within 50 ppm using the UP and DN voltage control lines to the VCXO.

Table 23. SDI Video Output Standards for the SD and HD Input

SD_HD Input	Supported Output Standards	Rise Time
0	SMPTE 424M, SMPTE 292M	Faster
1	SMPTE 259M	Slower

Table 24. SDI Video Output Interface Pin Assignments, Schematic Signal Names, and Functions

Board Reference	Schematic Signal Name	FPGA Pin Number	I/O Standard
14	SDI_AVDD	—	—
2	SDI_AVDD	—	—
7	SDI_AVDD	—	—
9	SDI_SD_HDN	AW34	1.8 V
5	SDI_TX_RSET	—	—
1	SDI_TXCAP_N	D43	High Speed Differential I/O
16	SDI_TXCAP_P	D44	High Speed Differential I/O
10	SDI_TXDRV_N	—	—
11	SDI_TXDRV_P	—	—

Table 25. SDI Cable Equalizer Lengths

The cable equalizer supports operation at 270 Mbit SD, 1.5 Gbit HD, and 3.0, 6.0, and 11.88 Gbit dual-link HD modes. Control signals are allowed for bypassing or disabling the device, as well as a carrier detect or auto-mute signal interface.

Cable Type	Data Rate (Mbps)	Maximum Cable Length (m)
Belden 1694A	270	400
Belden 1694A	1485	140
Belden 1694A	2970	120

Table 26. SDI Video Input Interface Pin Assignments, Schematic Signal Names, and Functions

Board Reference	Schematic Signal Name	FPGA Pin Number	I/O Standard
9	AGCN	—	—
8	AGXP	—	—
10	MF0_BYPASS	AW32	1.8 V

continued...

Board Reference	Schematic Signal Name	FPGA Pin Number	I/O Standard
19	MF1_AUTO_SLEEP	AY32	1.8 V
21	MF2_MUTE	AY35	1.8 V
22	MF3_XSD	—	—
6	MODE_SEL	—	—
11	MUTEREF	—	—
4	SDI_EQIN_N1	—	—
3	SDI_EQIN_P1	—	—
14	SDO_N / SDI_RX_N	H39	High Speed Differential I/O
15	SDO_P / SDI_RX_P	H40	High Speed Differential I/O

6.6. Clock Circuitry

6.6.1. On-Board Oscillators

Figure 32. Arria 10 GX FPGA Kit Board Clock Inputs and Default Frequencies

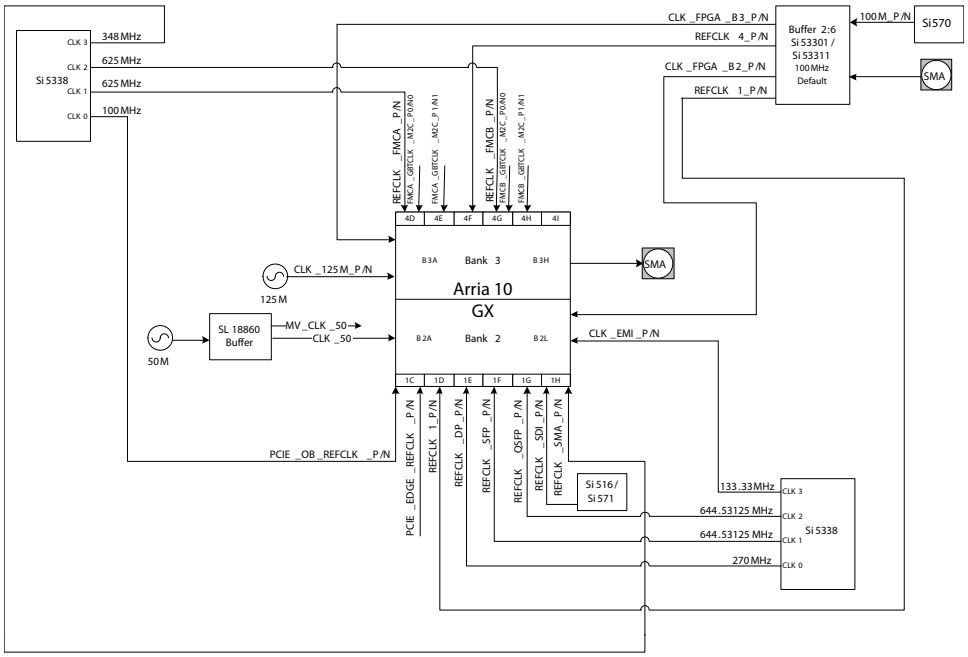

Table 27. On-Board Oscillators

Source	Schematic Signal Name	Frequency	I/O Standard	Arria 10 FPGA Pin Number	Application
U14	REFCLK_SMA_P	302.083333 MHz	1.8 V LVDS	N37	Transceiver reference clocks Bank-1H
	REFCLK_SMA_N		1.8 V LVDS	N38	
	REFCLK_FMCB_P	625 MHz	1.8 V LVDS	AA8	FMC B reference clocks
	REFCLK_FMCB_N		1.8 V LVDS	AA7	
	REFCLK_FMCA_P	625 MHz	1.8 V LVDS	AN8	FMC A reference clocks
	REFCLK_FMCA_N		1.8 V LVDS	AN7	
	PCIE_OB_REFCLK_P	100 MHz	1.8 V LVDS	AN37	PCIE reference clocks
	PCIE_OB_REFCLK_N		1.8 V LVDS	AN38	
U26	CLK_EMI_P	133.33 MHz	1.8 V LVDS	F34	EMI reference clocks
	CLK_EMI_N		1.8 V LVDS	F35	
	REFCLK_QSFP_P	644.53125 MHz	1.8 V LVDS	R37	QSFP reference clocks

continued...

Source	Schematic Signal Name	Frequency	I/O Standard	Arria 10 FPGA Pin Number	Application
	REFCLK_QSFP_N		1.8 V LVDS	R38	
	REFCLK_SFP_P	644.53125 MHz	1.8 V LVDS	AA37	SFP reference clocks
	REFCLK_SFP_N		1.8 V LVDS	AA38	
	REFCLK_DP_P	270 MHz	1.8 V LVDS	AC37	Display port (DP) reference clocks
	REFCLK_DP_N		1.8 V LVDS	AC38	
X1	REFCLK_SDI_P	148.35 MHz	1.8 V LVDS	L37	SDI reference clocks
	REFCLK_SDI_N		1.8 V LVDS	L38	
X2	CLK_125_P	125 MHz	1.8 V LVDS	BD24	125 MHz reference clocks for Arria 10 FPGA
	CLK_125_N		1.8 V LVDS	BC24	
X3	100M_OSC_P	100 MHz	LVDS	AR36, F23, AG37, AC8	Programmable Oscillator default 100MHz
	100M_OSC_N		LVDS	AR37, G23, AG38, AC7	
U53	MV_CLK_50	50 MHz	1.8 V	-	MAX V System Controller clock
	CLK_50		1.8 V	AU33	Arria 10 FPGA reference clock

6.6.2. Off-Board Clock I/O

The development board has input and output clocks which can be driven onto the board. The output clocks can be programmed to different levels and I/O standards according to the FPGA device's specification.

Table 28. Off-Board Clock Inputs

Source	Schematic Signal Name	I/O Standard	Arria 10 FPGA Pin Number	Description
J6	CLKIN_SMA	2.5 V	-	SMA clock input

Table 29. Off-Board Clock Outputs

Source	Schematic Signal Name	I/O Standard	Arria 10 FPGA Pin Number	Description
J7	SMA_CLK_OUT	1.8 V	E24	SMA clock output
J16	SMA_TX_P	1.8 V	C42	SMA transfer clocks
J15	SMA_TX_N	1.8 V	C41	

6.7. Components and Interfaces

This section describes the development board's communication ports and interface cards relative to the Arria 10 GX FPGA device.

6.7.1. PCI Express

The Arria 10 GX FPGA development board is designed to fit entirely into a PC motherboard with a ×8 PCI Express slot that can accommodate a full height long form factor add-in card. This interface uses the Arria 10 GX FPGA's PCI Express hard IP block, saving logic resources for the user logic application. The PCI express edge connector has a presence detect feature to allow the motherboard to determine if a card is installed.

The PCI Express interface supports auto-negotiating channel width from ×1 to ×4 to ×8 by using Altera's PCIe MegaCore IP. You can also configure this board to a ×1, ×4, or ×8 interface through a DIP switch that connects the PRSNTn pins for each bus width.

The PCI Express edge connector has a connection speed of 2.5 Gbps/lane for a maximum of 20 Gbps full-duplex (Gen1), 5.0 Gbps/lane for a maximum of 40 Gbps full-duplex (Gen2), or 8.0 Gbps/lane for a maximum of 64 Gbps full-duplex (Gen3).

The power for the board can be sourced entirely from the PC host when installed into a PC motherboard with the PC's 2x4 ATX auxiliary power connected to the 12V ATX input (J4) of the Arria 10 development board. Although the board can also be powered by a laptop power supply for use on a lab bench, Altera recommends that you do not power up from both supplies at the same time. Ideal diode power sharing devices have been designed into this board to prevent damages or back-current from one supply to the other.

The PCIE_REFCLK_P signal is a 100 MHz differential input that is driven from the PC motherboard on to this board through the edge connector. This signal connects directly to a Arria 10 GX FPGA REFCLK input pin pair using DC coupling. This clock is terminated on the motherboard and therefore, no on-board termination is required. This clock can have spread-spectrum properties that change its period between 9.847 ps to 10.203 ps. The I/O standard is High-Speed Current Steering Logic (HCSL). The JTAG and SMB are optional signals in the PCI Express specification. Therefore, the JTAG signal loopback from PCI Express TDI to PCI Express TDO and are not used on this board. The SMB signals are wired to the Arria 10 GX FPGA but are not required for normal operation.

Table 30. PCI Express Pin Assignments, Schematic Signal Names, and Functions

Receive bus	Receive bus	FPGA Pin Number	I/O Standard	Description
A11	PCIE_EDGE_PERSTN	BC30	1.8 V	Reset
A14	PCIE_EDGE_REFCLK_N	AL38	LVDS	Motherboard reference clock
A13	PCIE_EDGE_REFCLK_P	AL37	LVDS	Motherboard reference clock
B5	PCIE_EDGE_SMBCLK	BD29	1.8 V	SMB clock

continued...

Receive bus	Receive bus	FPGA Pin Number	I/O Standard	Description
B6	PCIE_EDGE_SMB DAT	AU37	1.8 V	SMB data
A1	PCIE_PRSNT1N	—	—	Link with DIP switch
B17	PCIE_PRSNT2N_X 1	—	—	Link with DIP switch
B31	PCIE_PRSNT2N_X 4	—	—	Link with DIP switch
B48	PCIE_PRSNT2N_X 8	—	—	Link with DIP switch
B15	PCIE_RX_N0	AT39	High Speed Differential I/O	Receive bus
B20	PCIE_RX_N1	AP39	High Speed Differential I/O	Receive bus
B24	PCIE_RX_N2	AN41	High Speed Differential I/O	Receive bus
B28	PCIE_RX_N3	AM39	High Speed Differential I/O	Receive bus
B34	PCIE_RX_N4	AL41	High Speed Differential I/O	Receive bus
B38	PCIE_RX_N5	AK39	High Speed Differential I/O	Receive bus
B42	PCIE_RX_N6	AJ41	High Speed Differential I/O	Receive bus
B46	PCIE_RX_N7	AH39	High Speed Differential I/O	Receive bus
B14	PCIE_RX_P0	AT40	High Speed Differential I/O	Receive bus
B19	PCIE_RX_P1	AP40	High Speed Differential I/O	Receive bus
B23	PCIE_RX_P2	AN42	High Speed Differential I/O	Receive bus
B27	PCIE_RX_P3	AM40	High Speed Differential I/O	Receive bus
B33	PCIE_RX_P4	AL42	High Speed Differential I/O	Receive bus
B37	PCIE_RX_P5	AK40	High Speed Differential I/O	Receive bus
B41	PCIE_RX_P6	AJ42	High Speed Differential I/O	Receive bus
B45	PCIE_RX_P7	AH40	High Speed Differential I/O	Receive bus
A17	PCIE_TX_CN0	BB43	High Speed Differential I/O	Transmit bus
A22	PCIE_TX_CN1	BA41	High Speed Differential I/O	Transmit bus
A26	PCIE_TX_CN2	AY43	High Speed Differential I/O	Transmit bus

continued...

Receive bus	Receive bus	FPGA Pin Number	I/O Standard	Description
A30	PCIE_TX_CN3	AW41	High Speed Differential I/O	Transmit bus
A36	PCIE_TX_CN4	AV43	High Speed Differential I/O	Transmit bus
A40	PCIE_TX_CN5	AU41	High Speed Differential I/O	Transmit bus
A44	PCIE_TX_CN6	AT43	High Speed Differential I/O	Transmit bus
A48	PCIE_TX_CN7	AR41	High Speed Differential I/O	Transmit bus
A16	PCIE_TX_CP0	BB44	High Speed Differential I/O	Transmit bus
A21	PCIE_TX_CP1	BA42	High Speed Differential I/O	Transmit bus
A25	PCIE_TX_CP2	AY44	High Speed Differential I/O	Transmit bus
A29	PCIE_TX_CP3	AW42	High Speed Differential I/O	Transmit bus
A35	PCIE_TX_CP4	AV44	High Speed Differential I/O	Transmit bus
A39	PCIE_TX_CP5	AU42	High Speed Differential I/O	Transmit bus
A43	PCIE_TX_CP6	AT44	High Speed Differential I/O	Transmit bus
A47	PCIE_TX_CP7	AR42	High Speed Differential I/O	Transmit bus
B11	PCIE_WAKEN_R	AY29	1.8 V	Wake signal

6.7.2. 10/100/1000 Ethernet PHY

The Arria 10 GX FPGA development board supports 10/100/1000 base-T Ethernet using an external Marvell 88E1111 PHY and Altera Triple-Speed Ethernet MegaCore MAC function. The PHY-to-MAC interface employs SGMII using the Arria 10 GX FPGA LVDS pins in Soft-CDR mode at 1.25 Gbps transmit and receive. In 10-Mb or 100-Mb mode, the SGMII interface still runs at 1.25 GHz but the packet data is repeated 10 or 100 times. The MAC function must be provided in the FPGA for typical networking applications.

The Marvell 88E1111 PHY uses 2.5-V and 1.0-V power rails and requires a 25 MHz reference clock driven from a dedicated oscillator. The PHY interfaces to a HALO HFJ11-1G02E model RJ45 with internal magnetics that can be used for driving copper lines with Ethernet traffic.

Figure 33. SGMII Interface between FPGA (MAC) and Marvell 88E1111 PHY

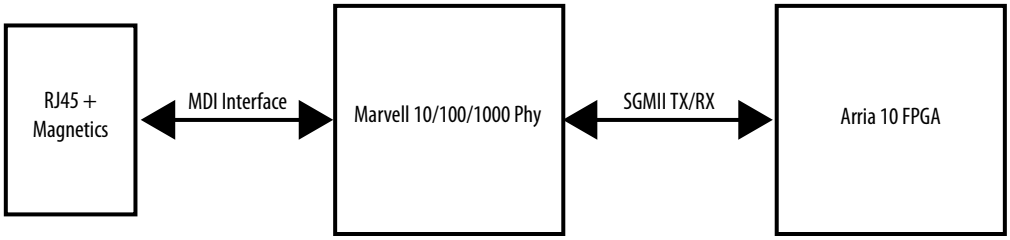

Table 31. Ethernet PHY Pin Assignments, Signal Names and Functions

Board Reference (U15)	Schematic Signal Name	FPGA Pin Number	I/O Standard	Description
23	ENET_2P5V_INTN	AG13	1.8 V	Management bus interrupt
25	ENET_2P5V_MDC	AF13	1.8 V	Management bus data clock
24	ENET_2P5V_MDIO	AL18	1.8 V	Management bus data
28	ENET_2P5V_RESETN	AW23	1.8 V	Device reset
59	ENET_LED_LINK10	—	2.5 V	10-Mb link LED
76	ENET_LED_LINK10	—	2.5 V	10-Mb link LED
74	ENET_LED_LINK100	—	2.5 V	100-Mb link LED
60	ENET_LED_LINK1000	—	2.5 V	1000-Mb link LED
73	ENET_LED_LINK1000	—	2.5 V	1000-Mb link LED
58	ENET_LED_RX	—	2.5 V	RX data active LED
69	ENET_LED_RX	—	2.5 V	RX data active LED
68	ENET_LED_TX	—	2.5 V	TX data active LED
30	ENET_RSET	AW23	1.8 V	Device reset
75	ENET_RX_N	AW24	LVDS	SGMII receive channel

continued...

Board Reference (U15)	Schematic Signal Name	FPGA Pin Number	I/O Standard	Description
77	ENET_RX_P	AV24		SGMII receive channel
81	ENET_TX_N	BD23		SGMII transmit channel
82	ENET_TX_P	BC23		SGMII transmit channel
55	ENET_XTAL_25MHZ	—	2.5 V	25-MHz RGMII transmit clock
31	MDI_N0	—		Media dependent interface
34	MDI_N1	—		
41	MDI_N2	—		
43	MDI_N3	—		
29	MDI_P0	—		
33	MDI_P1	—		
39	MDI_P2	—		
42	MDI_P3	—		

6.7.3. HiLo External Memory Interface

This section describes the Arria 10 GX FPGA development board's external memory interface support and also their signal names, types, and connectivity relative to the Arria 10 GX FPGA.

The HiLo connector supports plugins the following memory interfaces:

- DDR3 x72 (included in the kit)
- DDR4 x72 (included in the kit)
- RLDRAM3 x36 (included in the kit)
- QDR IV x36 (not included. Contact your local Altera sales representative for ordering and availability)

Table 32. HiLo EMI Pin Assignments, Schematic Signal Names

Board Reference	Schematic Signal Name	FPGA Pin Number	I/O Standard
F1	MEM_ADDR_CMD0	M32	1.5 V
H1	MEM_ADDR_CMD1	L32	1.5 V
F2	MEM_ADDR_CMD2	N34	1.5 V
G2	MEM_ADDR_CMD3	M35	1.5 V
H2	MEM_ADDR_CMD4	L34	1.5 V
J2	MEM_ADDR_CMD5	K34	1.5 V
K2	MEM_ADDR_CMD6	M33	1.5 V
G3	MEM_ADDR_CMD7	L33	1.5V
J3	MEM_ADDR_CMD8	J33	1.5 V
L3	MEM_ADDR_CMD9	J32	1.5 V
E4	MEM_ADDR_CMD10	H31	1.5 V
F4	MEM_ADDR_CMD11	J31	1.5 V
G4	MEM_ADDR_CMD12	H34	1.5 V
H4	MEM_ADDR_CMD13	H33	1.5 V
J4	MEM_ADDR_CMD14	G32	1.5 V
K4	MEM_ADDR_CMD15	E32	1.5 V
M1	MEM_ADDR_CMD16	F33	1.5 V
M2	MEM_ADDR_CMD17	G35	1.5 V
N2	MEM_ADDR_CMD18	H35	1.5 V
L4	MEM_ADDR_CMD19	G33	1.5 V
P5	MEM_ADDR_CMD20	U33	1.5 V
M5	MEM_ADDR_CMD21	T33	1.5 V
P1	MEM_ADDR_CMD22	R34	1.5 V
R4	MEM_ADDR_CMD23	P34	1.5 V
M4	MEM_ADDR_CMD24	N33	1.5 V

continued...

Board Reference	Schematic Signal Name	FPGA Pin Number	I/O Standard
R3	MEM_ADDR_CMD25	P33	1.5 V
L2	MEM_ADDR_CMD26	F32	1.5 V
K1	MEM_ADDR_CMD27	T35	1.5 V
P2	MEM_ADDR_CMD28	T34	1.5 V
N4	MEM_ADDR_CMD29	E35	1.5 V
P4	MEM_ADDR_CMD30	U32	1.5 V
N3	MEM_ADDR_CMD31	T32	1.5 V
V2	MEM_CLK_N	R31	1.5 V
V1	MEM_CLK_P	R30	1.5 V
B10	MEM_DMA0	E26	1.5 V
C4	MEM_DMA1	G27	1.5 V
B17	MEM_DMA2	A29	1.5 V
F17	MEM_DMA3	F30	1.5 V
M16	MEM_DMB0	AB32	1.5 V
U16	MEM_DMB1	AG31	1.5 V
U11	MEM_DMB2	Y35	1.5 V
U6	MEM_DMB3	AC34	1.5 V
R6	MEM_DQ_ADDR_CMD0	A32	1.5 V
T1	MEM_DQ_ADDR_CMD1	A33	1.5 V
R2	MEM_DQ_ADDR_CMD2	B32	1.5 V
T2	MEM_DQ_ADDR_CMD3	D32	1.5 V
U2	MEM_DQ_ADDR_CMD4	C33	1.5 V
U3	MEM_DQ_ADDR_CMD5	B33	1.5 V
T4	MEM_DQ_ADDR_CMD6	D34	1.5 V
U4	MEM_DQ_ADDR_CMD7	C35	1.5 V
T5	MEM_DQ_ADDR_CMD8	E34	1.5 V
A4	MEM_DQA0	B28	1.5 V
B4	MEM_DQA1	A28	1.5 V
B5	MEM_DQA2	A27	1.5 V
B6	MEM_DQA3	B27	1.5 V
A8	MEM_DQA4	D27	1.5 V
B8	MEM_DQA5	E27	1.5 V
B9	MEM_DQA6	D26	1.5 V
A10	MEM_DQA7	D28	1.5 V
B1	MEM_DQA8	G25	1.5 V
B2	MEM_DQA9	H25	1.5 V

continued...

Board Reference	Schematic Signal Name	FPGA Pin Number	I/O Standard
C2	MEM_DQA10	G26	1.5 V
C3	MEM_DQA11	H26	1.5 V
E3	MEM_DQA12	G28	1.5 V
D4	MEM_DQA13	F27	1.5 V
D1	MEM_DQA14	K27	1.5 V
D2	MEM_DQA15	F28	1.5 V
A12	MEM_DQA16	D31	1.5 V
B12	MEM_DQA17	E31	1.5 V
B13	MEM_DQA18	B31	1.5 V
B14	MEM_DQA19	C31	1.5 V
C15	MEM_DQA20	A30	1.5 V
A16	MEM_DQA21	E30	1.5 V
B16	MEM_DQA22	B30	1.5 V
A18	MEM_DQA23	D29	1.5 V
C16	MEM_DQA24	K30	1.5 V
D16	MEM_DQA25	H30	1.5 V
E16	MEM_DQA26	G30	1.5 V
F16	MEM_DQA27	K31	1.5 V
D17	MEM_DQA28	H29	1.5 V
C18	MEM_DQA29	K29	1.5 V
D18	MEM_DQA30	J29	1.5 V
E18	MEM_DQA31	F29	1.5 V
E2	MEM_DQA32	J28	1.5 V
G16	MEM_DQA33	G31	1.5 V
H16	MEM_DQB0	AC31	1.5 V
J16	MEM_DQB1	AB31	1.5 V
K16	MEM_DQB2	W31	1.5 V
L16	MEM_DQB3	Y31	1.5 V
H17	MEM_DQB4	AD31	1.5 V
K17	MEM_DQB5	AD32	1.5 V
K18	MEM_DQB6	AD33	1.5 V
L18	MEM_DQB7	AA30	1.5 V
M17	MEM_DQB8	AE31	1.5 V
N18	MEM_DQB9	AE32	1.5 V
P17	MEM_DQB10	AE30	1.5 V
P18	MEM_DQB11	AF30	1.5 V

continued...

Board Reference	Schematic Signal Name	FPGA Pin Number	I/O Standard
R18	MEM_DQB12	AG33	1.5 V
T16	MEM_DQB13	AG32	1.5 V
T17	MEM_DQB14	AH33	1.5 V
T18	MEM_DQB15	AH31	1.5 V
U15	MEM_DQB16	U31	1.5 V
T14	MEM_DQB17	W33	1.5 V
U14	MEM_DQB18	W32	1.5 V
V14	MEM_DQB19	V31	1.5 V
T13	MEM_DQB20	Y34	1.5 V
T12	MEM_DQB21	W35	1.5 V
U12	MEM_DQB22	W34	1.5 V
V12	MEM_DQB23	V34	1.5 V
T10	MEM_DQB24	AH35	1.5 V
U10	MEM_DQB25	AJ34	1.5 V
V10	MEM_DQB26	AJ33	1.5 V
T9	MEM_DQB27	AH34	1.5 V
T8	MEM_DQB28	AD35	1.5 V
U8	MEM_DQB29	AE34	1.5 V
U7	MEM_DQB30	AC33	1.5 V
V6	MEM_DQB31	AD34	1.5 V
R16	MEM_DQB32	AF32	1.5 V
T6	MEM_DQB33	AB33	1.5 V
V5	MEM_DQS_ADDR_CMD_N	C34	1.5 V
V4	MEM_DQS_ADDR_CMD_P	D33	1.5 V
A7	MEM_DQSA_N0	C26	1.5 V
A3	MEM_DQSA_N1	J27	1.5 V
A15	MEM_DQSA_N2	C29	1.5 V
G18	MEM_DQSA_N3	L29	1.5 V
A6	MEM_DQSA_P0	B26	1.5 V
A2	MEM_DQSA_P1	H28	1.5 V
A14	MEM_DQSA_P2	C30	1.5 V
F18	MEM_DQSA_P3	L30	1.5 V
J18	MEM_DQSB_N0	AA32	1.5 V
V18	MEM_DQSB_N1	AJ31	1.5 V
V17	MEM_DQSB_N2	AA33	1.5 V
V9	MEM_DQSB_N3	AF34	1.5 V

continued...

Board Reference	Schematic Signal Name	FPGA Pin Number	I/O Standard
H18	MEM_DQSB_P0	Y32	1.5 V
U18	MEM_DQSB_P1	AJ32	1.5 V
V16	MEM_DQSB_P2	AA34	1.5 V
V8	MEM_DQSB_P3	AF33	1.5 V
A11	MEM_QKA_P0	C28	1.5 V
B18	MEM_QKA_P1	E29	1.5 V
M18	MEM_QKB_P0	Y30	1.5 V
V13	MEM_QKB_P1	V33	1.5 V
H14	MEM_VREF	AB30	—
J13	MEM_VREF	K32	—
K14	MEM_VREF	R32	—

Related Information

External Memory Interfaces in Arria 10 Devices

6.7.4. FMC

The Arria 10 GX FPGA development board includes a high pin count (HPC) FPGA mezzanine card (FMC) connector that functions with a quadrature amplitude modulation (QAM) digital-to-analog converter (DAC) FMC module or daughtercard. This pin-out satisfies a QAM DAC that requires 58 LVDS data output pairs, one LVDS input clock pair, and three low-voltage differential signaling (LVDS) control pairs from the FPGA device. These pins also have the option to be used as single-ended I/O pins.

The VCCIO supply for the FMC A and FMC B banks provide a variable voltage of 1.2V - 1.8V. The default voltage value is 1.8V.

However, for device safety concerns, a jumper is available for you to connect this bank to the same VCCIO used for the FMC A banks. This allows the VCCIO pins on the FPGA to be tied to a known power. The VCCIO pins also allows you the option to perform a manual check for the module's input voltage before connecting to the FPGA. This is to ensure that the module does not exceed the power supply maximum voltage rating.

Table 33. FMC A Connector Pin Assignments, Schematic Signal Names

Board Reference	Schematic Signal Name	FPGA Pin Number	I/O Standard
D1	FMCA_C2M_PG	—	—
H5	FMCA_CLK_M2C_N0	AY19	High Speed Differential I/O
G3	FMCA_CLK_M2C_N1	BA13	High Speed Differential I/O
H4	FMCA_CLK_M2C_P0	AY20	High Speed Differential I/O
G2	FMCA_CLK_M2C_P1	BA12	High Speed Differential I/O
C3	FMCA_DP_C2M_N0	BC8	High Speed Differential I/O
A23	FMCA_DP_C2M_N1	BD6	High Speed Differential I/O
A27	FMCA_DP_C2M_N2	BB6	High Speed Differential I/O
A31	FMCA_DP_C2M_N3	BC4	High Speed Differential I/O
A35	FMCA_DP_C2M_N4	BB2	High Speed Differential I/O
A39	FMCA_DP_C2M_N5	BA4	High Speed Differential I/O
B37	FMCA_DP_C2M_N6	AY2	High Speed Differential I/O
B33	FMCA_DP_C2M_N7	AW4	High Speed Differential I/O
B29	FMCA_DP_C2M_N8	AV2	High Speed Differential I/O
B25	FMCA_DP_C2M_N9	AU4	High Speed Differential I/O

continued...

Board Reference	Schematic Signal Name	FPGA Pin Number	I/O Standard
K23	FMCA_DP_C2M_N10	AT2	High Speed Differential I/O
K26	FMCA_DP_C2M_N11	AR4	High Speed Differential I/O
K29	FMCA_DP_C2M_N12	AP2	High Speed Differential I/O
K32	FMCA_DP_C2M_N13	AM2	High Speed Differential I/O
K35	FMCA_DP_C2M_N14	AK2	High Speed Differential I/O
K38	FMCA_DP_C2M_N15	AH2	High Speed Differential I/O
C2	FMCA_DP_C2M_P0	BC7	High Speed Differential I/O
A22	FMCA_DP_C2M_P1	BD5	High Speed Differential I/O
A26	FMCA_DP_C2M_P2	BB5	High Speed Differential I/O
A30	FMCA_DP_C2M_P3	BC3	High Speed Differential I/O
A34	FMCA_DP_C2M_P4	BB1	High Speed Differential I/O
A38	FMCA_DP_C2M_P5	BA3	High Speed Differential I/O
B36	FMCA_DP_C2M_P6	AY1	High Speed Differential I/O
B32	FMCA_DP_C2M_P7	AW3	High Speed Differential I/O
B28	FMCA_DP_C2M_P8	AV1	High Speed Differential I/O
B24	FMCA_DP_C2M_P9	AU3	High Speed Differential I/O
K22	FMCA_DP_C2M_P10	AT1	High Speed Differential I/O
K25	FMCA_DP_C2M_P11	AR3	High Speed Differential I/O
K28	FMCA_DP_C2M_P12	AP1	High Speed Differential I/O
K31	FMCA_DP_C2M_P13	AM1	High Speed Differential I/O
K34	FMCA_DP_C2M_P14	AK1	High Speed Differential I/O
K37	FMCA_DP_C2M_P15	AH1	High Speed Differential I/O
C7	FMCA_DP_M2C_N0	AW8	High Speed Differential I/O

continued...

Board Reference	Schematic Signal Name	FPGA Pin Number	I/O Standard
A3	FMCA_DP_M2C_N1	BA8	High Speed Differential I/O
A7	FMCA_DP_M2C_N2	AY6	High Speed Differential I/O
A11	FMCA_DP_M2C_N3	AV6	High Speed Differential I/O
A15	FMCA_DP_M2C_N4	AT6	High Speed Differential I/O
A19	FMCA_DP_M2C_N5	AP6	High Speed Differential I/O
B17	FMCA_DP_M2C_N6	AN4	High Speed Differential I/O
B13	FMCA_DP_M2C_N7	AM6	High Speed Differential I/O
B9	FMCA_DP_M2C_N8	AL4	High Speed Differential I/O
B5	FMCA_DP_M2C_N9	AK6	High Speed Differential I/O
K5	FMCA_DP_M2C_N10	AJ4	High Speed Differential I/O
K8	FMCA_DP_M2C_N11	AH6	High Speed Differential I/O
K11	FMCA_DP_M2C_N12	AG4	High Speed Differential I/O
K14	FMCA_DP_M2C_N13	AF6	High Speed Differential I/O
K17	FMCA_DP_M2C_N14	AE4	High Speed Differential I/O
K20	FMCA_DP_M2C_N15	AD6	High Speed Differential I/O
C6	FMCA_DP_M2C_P0	AW7	High Speed Differential I/O
A2	FMCA_DP_M2C_P1	BA7	High Speed Differential I/O
A6	FMCA_DP_M2C_P2	AY5	High Speed Differential I/O
A10	FMCA_DP_M2C_P3	AV5	High Speed Differential I/O
A14	FMCA_DP_M2C_P4	AT5	High Speed Differential I/O
A18	FMCA_DP_M2C_P5	AP5	High Speed Differential I/O
B16	FMCA_DP_M2C_P6	AN3	High Speed Differential I/O
B12	FMCA_DP_M2C_P7	AM5	High Speed Differential I/O

continued...

Board Reference	Schematic Signal Name	FPGA Pin Number	I/O Standard
B8	FMCA_DP_M2C_P8	AL3	High Speed Differential I/O
B4	FMCA_DP_M2C_P9	AK5	High Speed Differential I/O
K4	FMCA_DP_M2C_P10	AJ3	High Speed Differential I/O
K7	FMCA_DP_M2C_P11	AH5	High Speed Differential I/O
K10	FMCA_DP_M2C_P12	AG3	High Speed Differential I/O
K13	FMCA_DP_M2C_P13	AF5	High Speed Differential I/O
K16	FMCA_DP_M2C_P14	AE3	High Speed Differential I/O
K19	FMCA_DP_M2C_P15	AD5	High Speed Differential I/O
C34	FMCA_GA0	BC16	1.8 V
D35	FMCA_GA1	BD16	1.8 V
D5	FMCA_GBTCLK_M2C_N0	AL7	LVDS
B21	FMCA_GBTCLK_M2C_N1	AJ7	LVDS
D4	FMCA_GBTCLK_M2C_P0	AL8	LVDS
B20	FMCA_GBTCLK_M2C_P1	AJ8	LVDS
D34	FMCA_JTAG_RST	—	—
D29	FMCA_JTAG_TCK	—	—
D30	FMCA_JTAG_TDI	—	—
D31	FMCA_JTAG_TDO	—	—
D33	FMCA_JTAG_TMS	—	—
G7	FMCA_LA_RX_CLK_N0	AU15	LVDS
D9	FMCA_LA_RX_CLK_N1	AR11	LVDS
G6	FMCA_LA_RX_CLK_P0	AV15	LVDS
D8	FMCA_LA_RX_CLK_P1	AT10	LVDS
G10	FMCA_LA_RX_N0	AR19	LVDS
C11	FMCA_LA_RX_N1	AW14	LVDS
G13	FMCA_LA_RX_N2	AN19	LVDS
C15	FMCA_LA_RX_N3	AT15	LVDS
G16	FMCA_LA_RX_N4	AP16	LVDS
C19	FMCA_LA_RX_N5	AV18	LVDS
G19	FMCA_LA_RX_N6	AU13	LVDS
C23	FMCA_LA_RX_N7	AV21	LVDS

continued...

Board Reference	Schematic Signal Name	FPGA Pin Number	I/O Standard
G22	FMCA_LA_RX_N8	AT8	LVDS
G25	FMCA_LA_RX_N9	AY12	LVDS
G28	FMCA_LA_RX_N10	AY14	LVDS
C27	FMCA_LA_RX_N11	AR21	LVDS
G31	FMCA_LA_RX_N12	BA14	LVDS
G34	FMCA_LA_RX_N13	BB18	LVDS
G37	FMCA_LA_RX_N14	AW17	LVDS
G9	FMCA_LA_RX_P0	AR20	LVDS
C10	FMCA_LA_RX_P1	AV14	LVDS
G12	FMCA_LA_RX_P2	AP18	LVDS
C14	FMCA_LA_RX_P3	AR15	LVDS
G15	FMCA_LA_RX_P4	AR16	LVDS
C18	FMCA_LA_RX_P5	AW18	LVDS
G18	FMCA_LA_RX_P6	AT13	LVDS
C22	FMCA_LA_RX_P7	AU21	LVDS
G21	FMCA_LA_RX_P8	AU8	LVDS
G24	FMCA_LA_RX_P9	AW12	LVDS
G27	FMCA_LA_RX_P10	AY15	LVDS
C26	FMCA_LA_RX_P11	AP21	LVDS
G30	FMCA_LA_RX_P12	BA15	LVDS
G33	FMCA_LA_RX_P13	BB17	LVDS
G36	FMCA_LA_RX_P14	AY17	LVDS
H8	FMCA_LA_TX_N0	AT22	LVDS
H11	FMCA_LA_TX_N1	AP19	LVDS
D12	FMCA_LA_TX_N2	AW11	LVDS
H14	FMCA_LA_TX_N3	AU17	LVDS
D15	FMCA_LA_TX_N4	AV13	LVDS
H17	FMCA_LA_TX_N5	AR14	LVDS
D18	FMCA_LA_TX_N6	AP17	LVDS
H20	FMCA_LA_TX_N7	AT9	LVDS
D21	FMCA_LA_TX_N8	AW19	LVDS
H23	FMCA_LA_TX_N9	AU12	LVDS
H26	FMCA_LA_TX_N10	AY11	LVDS
D24	FMCA_LA_TX_N11	AT18	LVDS
H29	FMCA_LA_TX_N12	BC15	LVDS

continued...

Board Reference	Schematic Signal Name	FPGA Pin Number	I/O Standard
D27	FMCA_LA_TX_N13	AT20	LVDS
H32	FMCA_LA_TX_N14	AW16	LVDS
H35	FMCA_LA_TX_N15	BD18	LVDS
H38	FMCA_LA_TX_N16	AU20	LVDS
H7	FMCA_LA_TX_P0	AR22	LVDS
H10	FMCA_LA_TX_P1	AN20	LVDS
D11	FMCA_LA_TX_P2	AV11	LVDS
H13	FMCA_LA_TX_P3	AT17	LVDS
D14	FMCA_LA_TX_P4	AW13	LVDS
H16	FMCA_LA_TX_P5	AT14	LVDS
D17	FMCA_LA_TX_P6	AR17	LVDS
H19	FMCA_LA_TX_P7	AR9	LVDS
D20	FMCA_LA_TX_P8	AV19	LVDS
H22	FMCA_LA_TX_P9	AU11	LVDS
H25	FMCA_LA_TX_P10	AY10	LVDS
D23	FMCA_LA_TX_P11	AU18	LVDS
H28	FMCA_LA_TX_P12	BB15	LVDS
D26	FMCA_LA_TX_P13	AT19	LVDS
H31	FMCA_LA_TX_P14	AY16	LVDS
H34	FMCA_LA_TX_P15	BC18	LVDS
H37	FMCA_LA_TX_P16	AV20	LVDS
F1	FMCA_M2C_PG	—	
H2	FMCA_PRSNTN	P16	1.8 V
C30	FMCA_SCL	AU10	1.8 V
C31	FMCA_SDA	AV10	1.8 V
J39	VIO_B_M2C	—	—
K40	VIO_B_M2C	—	—
K1	VREF_B_M2C	—	—
H1	VREF_FMCA	—	—

Table 34. FMC B Connector Pin Assignments, Schematic Signal Names

FMCB Connector Pin Number	Schematic Signal Name	FPGA Pin Number	I/O Standard
D1	FMCB_C2M_PG	—	—
H5	FMCB_CLK_M2C_N0	K12	High Speed Differential I/O

continued...

FMCB Connector Pin Number	Schematic Signal Name	FPGA Pin Number	I/O Standard
G3	FMCB_CLK_M2C_N1	G17	High Speed Differential I/O
H4	FMCB_CLK_M2C_P0	J12	High Speed Differential I/O
G2	FMCB_CLK_M2C_P1	F17	High Speed Differential I/O
C3	FMCB_DP_C2M_N0	AB2	High Speed Differential I/O
A23	FMCB_DP_C2M_N1	Y2	High Speed Differential I/O
A27	FMCB_DP_C2M_N2	V2	High Speed Differential I/O
A31	FMCB_DP_C2M_N3	T2	High Speed Differential I/O
A35	FMCB_DP_C2M_N4	P2	High Speed Differential I/O
A39	FMCB_DP_C2M_N5	M2	High Speed Differential I/O
B37	FMCB_DP_C2M_N6	K2	High Speed Differential I/O
B33	FMCB_DP_C2M_N7	J4	High Speed Differential I/O
B29	FMCB_DP_C2M_N8	H2	High Speed Differential I/O
B25	FMCB_DP_C2M_N9	G4	High Speed Differential I/O
K23	FMCB_DP_C2M_N10	F2	High Speed Differential I/O
K26	FMCB_DP_C2M_N11	E4	High Speed Differential I/O
K29	FMCB_DP_C2M_N12	D2	High Speed Differential I/O
K32	FMCB_DP_C2M_N13	C4	High Speed Differential I/O
K35	FMCB_DP_C2M_N14	B2	High Speed Differential I/O
K38	FMCB_DP_C2M_N15	A4	High Speed Differential I/O
C2	FMCB_DP_C2M_P0	AB1	High Speed Differential I/O
A22	FMCB_DP_C2M_P1	Y1	High Speed Differential I/O
A26	FMCB_DP_C2M_P2	V1	High Speed Differential I/O
A30	FMCB_DP_C2M_P3	T1	High Speed Differential I/O

continued...

FMCB Connector Pin Number	Schematic Signal Name	FPGA Pin Number	I/O Standard
A34	FMCB_DP_C2M_P4	P1	High Speed Differential I/O
A38	FMCB_DP_C2M_P5	M1	High Speed Differential I/O
B36	FMCB_DP_C2M_P6	K12	High Speed Differential I/O
B32	FMCB_DP_C2M_P7	J3	High Speed Differential I/O
B28	FMCB_DP_C2M_P8	H1	High Speed Differential I/O
B24	FMCB_DP_C2M_P9	G3	High Speed Differential I/O
K22	FMCB_DP_C2M_P10	F1	High Speed Differential I/O
K25	FMCB_DP_C2M_P11	E3	High Speed Differential I/O
K28	FMCB_DP_C2M_P12	D1	High Speed Differential I/O
K31	FMCB_DP_C2M_P13	C3	High Speed Differential I/O
K34	FMCB_DP_C2M_P14	B1	High Speed Differential I/O
K37	FMCB_DP_C2M_P15	A3	High Speed Differential I/O
C7	FMCB_DP_M2C_N0	AA4	High Speed Differential I/O
A3	FMCB_DP_M2C_N1	W4	High Speed Differential I/O
A7	FMCB_DP_M2C_N2	Y6	High Speed Differential I/O
A11	FMCB_DP_M2C_N3	V6	High Speed Differential I/O
A15	FMCB_DP_M2C_N4	U4	High Speed Differential I/O
A19	FMCB_DP_M2C_N5	T6	High Speed Differential I/O
B17	FMCB_DP_M2C_N6	R4	High Speed Differential I/O
B13	FMCB_DP_M2C_N7	P6	High Speed Differential I/O
B9	FMCB_DP_M2C_N8	N4	High Speed Differential I/O
B5	FMCB_DP_M2C_N9	M6	High Speed Differential I/O
K5	FMCB_DP_M2C_N10	L4	High Speed Differential I/O

continued...

FMCB Connector Pin Number	Schematic Signal Name	FPGA Pin Number	I/O Standard
K8	FMCB_DP_M2C_N11	K6	High Speed Differential I/O
K11	FMCB_DP_M2C_N12	H6	High Speed Differential I/O
K14	FMCB_DP_M2C_N13	G8	High Speed Differential I/O
K17	FMCB_DP_M2C_N14	F6	High Speed Differential I/O
K20	FMCB_DP_M2C_N15	E8	High Speed Differential I/O
C6	FMCB_DP_M2C_P0	AA3	High Speed Differential I/O
A2	FMCB_DP_M2C_P1	W3	High Speed Differential I/O
A6	FMCB_DP_M2C_P2	Y5	High Speed Differential I/O
A10	FMCB_DP_M2C_P3	V5	High Speed Differential I/O
A14	FMCB_DP_M2C_P4	U3	High Speed Differential I/O
A18	FMCB_DP_M2C_P5	T5	High Speed Differential I/O
B16	FMCB_DP_M2C_P6	R3	High Speed Differential I/O
B12	FMCB_DP_M2C_P7	P5	High Speed Differential I/O
B8	FMCB_DP_M2C_P8	N3	High Speed Differential I/O
B4	FMCB_DP_M2C_P9	M5	High Speed Differential I/O
K4	FMCB_DP_M2C_P10	L3	High Speed Differential I/O
K7	FMCB_DP_M2C_P11	K5	High Speed Differential I/O
K10	FMCB_DP_M2C_P12	H5	High Speed Differential I/O
K13	FMCB_DP_M2C_P13	G7	High Speed Differential I/O
K16	FMCB_DP_M2C_P14	F5	High Speed Differential I/O
K19	FMCB_DP_M2C_P15	E7	High Speed Differential I/O
C34	FMCB_GA0	K22	1.8 V
D35	FMCB_GA1	L22	1.8 V
D5	FMCB_GBTCLK_M2C_N0	W7	LVDS

continued...

FMCB Connector Pin Number	Schematic Signal Name	FPGA Pin Number	I/O Standard
B21	FMCB_GBTCLK_M2C_N1	U7	LVDS
D4	FMCB_GBTCLK_M2C_P0	W8	LVDS
B20	FMCB_GBTCLK_M2C_P1	U8	LVDS
D34	FMCB_JTAG_RST	—	LVDS
D29	FMCB_JTAG_TCK	—	LVDS
D30	FMCB_JTAG_TDI	—	LVDS
D31	FMCB_JTAG_TDO	—	LVDS
D33	FMCB_JTAG_TMS	—	LVDS
G7	FMCB_LA_RX_CLK_N0	C10	LVDS
D9	FMCB_LA_RX_CLK_N1	F18	LVDS
G6	FMCB_LA_RX_CLK_P0	C11	LVDS
D8	FMCB_LA_RX_CLK_P1	G18	LVDS
G10	FMCB_LA_RX_N0	D16	LVDS
C11	FMCB_LA_RX_N1	H21	LVDS
G13	FMCB_LA_RX_N2	B13	LVDS
C15	FMCB_LA_RX_N3	B18	LVDS
G16	FMCB_LA_RX_N4	D11	LVDS
C19	FMCB_LA_RX_N5	C16	LVDS
G19	FMCB_LA_RX_N6	F12	LVDS
C23	FMCB_LA_RX_N7	G12	LVDS
G22	FMCB_LA_RX_N8	G20	LVDS
G25	FMCB_LA_RX_N9	H18	LVDS
G28	FMCB_LA_RX_N10	L13	LVDS
C27	FMCB_LA_RX_N11	J14	LVDS
G31	FMCB_LA_RX_N12	M17	LVDS
G34	FMCB_LA_RX_N13	M18	LVDS
G37	FMCB_LA_RX_N14	M20	LVDS
G9	FMCB_LA_RX_P0	D17	LVDS
C10	FMCB_LA_RX_P1	G21	LVDS
G12	FMCB_LA_RX_P2	A13	LVDS
C14	FMCB_LA_RX_P3	A18	LVDS
G15	FMCB_LA_RX_P4	D12	LVDS
C18	FMCB_LA_RX_P5	B16	LVDS
G18	FMCB_LA_RX_P6	E12	LVDS
C22	FMCB_LA_RX_P7	G11	LVDS

continued...

FMCB Connector Pin Number	Schematic Signal Name	FPGA Pin Number	I/O Standard
G21	FMCB_LA_RX_P8	H20	LVDS
G24	FMCB_LA_RX_P9	H19	LVDS
G27	FMCB_LA_RX_P10	M12	LVDS
C26	FMCB_LA_RX_P11	K14	LVDS
G30	FMCB_LA_RX_P12	M16	LVDS
G33	FMCB_LA_RX_P13	L18	LVDS
G36	FMCB_LA_RX_P14	M21	LVDS
H8	FMCB_LA_TX_N0	B17	LVDS
H11	FMCB_LA_TX_N1	B15	LVDS
D12	FMCB_LA_TX_N2	K19	LVDS
H14	FMCB_LA_TX_N3	C13	LVDS
D15	FMCB_LA_TX_N4	A14	LVDS
H17	FMCB_LA_TX_N5	E10	LVDS
D18	FMCB_LA_TX_N6	A12	LVDS
H20	FMCB_LA_TX_N7	F10	LVDS
D21	FMCB_LA_TX_N8	G13	LVDS
H23	FMCB_LA_TX_N9	H10	LVDS
H26	FMCB_LA_TX_N10	K17	LVDS
D24	FMCB_LA_TX_N11	J13	LVDS
H29	FMCB_LA_TX_N12	L14	LVDS
D27	FMCB_LA_TX_N13	N13	LVDS
H32	FMCB_LA_TX_N14	L19	LVDS
H35	FMCB_LA_TX_N15	K21	LVDS
H38	FMCB_LA_TX_N16	J21	LVDS
H7	FMCB_LA_TX_P0	A17	LVDS
H10	FMCB_LA_TX_P1	C15	LVDS
D11	FMCB_LA_TX_P2	J19	LVDS
H13	FMCB_LA_TX_P3	D13	LVDS
D14	FMCB_LA_TX_P4	A15	LVDS
H16	FMCB_LA_TX_P5	E11	LVDS
D17	FMCB_LA_TX_P6	B12	LVDS
H19	FMCB_LA_TX_P7	G10	LVDS
D20	FMCB_LA_TX_P8	F13	LVDS
H22	FMCB_LA_TX_P9	H11	LVDS
H25	FMCB_LA_TX_P10	K16	LVDS

continued...

FMCB Connector Pin Number	Schematic Signal Name	FPGA Pin Number	I/O Standard
D23	FMCB_LA_TX_P11	H13	LVDS
H28	FMCB_LA_TX_P12	M13	LVDS
D26	FMCB_LA_TX_P13	M15	LVDS
H31	FMCB_LA_TX_P14	K20	LVDS
H34	FMCB_LA_TX_P15	L20	LVDS
H37	FMCB_LA_TX_P16	J22	LVDS
F1	FMCB_M2C_PG	—	—
H2	FMCB_PRSNTN	P17	1.8 V
C30	FMCB_SCL	J17	1.8 V
C31	FMCB_SDA	J16	1.8 V
J39	VIO_B_M2C	—	—
K40	VIO_B_M2C	—	—
K1	VREF_B_M2C	—	—
H1	VREF_FMCB	—	—

Note: The FMC port B has the same pin assignments as port A but on a different board reference designation. For example, the pin assignments for FMCA_LA_TX_P1 is J1.H10 and FMCB_LA_TX_P1 is J2.H10.

6.7.5. QSFP

The Arria 10 GX FPGA development board includes a QSFP module.

Table 35. QSFP Pin Assignments, Schematic Signal Names, and Functions

Board Reference	Schematic Signal Name	FPGA Pin Number	I/O Standard	Description
28	QSFP_3P3V_INTERRUPTN	AL34	1.8 V	QSFP interrupt
31	QSFP_3P3V_LP_MODE	AK34	1.8 V	QSFP low power mode
27	QSFP_3P3V_MOD_PRSN	AU36	1.8 V	Module present
8	QSFP_3P3V_MOD_SELN	AU35	1.8 V	Module select
9	QSFP_3P3V_RSTN	AV35	1.8 V	Module reset
11	QSFP_3P3V_SCL	AV34	1.8 V	QSFP serial 2-wire clock
12	QSFP_3P3V_SDA	AU31	1.8 V	QSFP serial 2-wire data
18	QSFP_RX_N0	R41	High Speed Differential I/O	QSFP transmitter data
21	QSFP_RX_N1	P39	High Speed Differential I/O	QSFP transmitter data
15	QSFP_RX_N2	M39	High Speed Differential I/O	QSFP transmitter data
24	QSFP_RX_N3	L41	High Speed Differential I/O	QSFP transmitter data
17	QSFP_RX_P0	R42	High Speed Differential I/O	QSFP transmitter data
22	QSFP_RX_P1	P40	High Speed Differential I/O	QSFP transmitter data
14	QSFP_RX_P2	M40	High Speed Differential I/O	QSFP transmitter data
25	QSFP_RX_P3	L42	High Speed Differential I/O	QSFP transmitter data
37	QSFP_TX_N0	K43	High Speed Differential I/O	QSFP transmitter data
2	QSFP_TX_N1	J41	High Speed Differential I/O	QSFP transmitter data
34	QSFP_TX_N2	G41	High Speed Differential I/O	QSFP transmitter data
5	QSFP_TX_N3	F43	High Speed Differential I/O	QSFP transmitter data
36	QSFP_TX_P0	K44	High Speed Differential I/O	QSFP transmitter data
3	QSFP_TX_P1	J42	High Speed Differential I/O	QSFP transmitter data
33	QSFP_TX_P2	G42	High Speed Differential I/O	QSFP transmitter data
6	QSFP_TX_P3	F44	High Speed Differential I/O	QSFP transmitter data

6.7.6. SFP+

The Arria 10 GX FPGA development board includes one SFP+ module that uses transceiver channels from the FPGA. This module takes in serial data from the FPGA and transform them into optical signals. The Arria 10 GX FPGA development board includes one SFP+ cage assembly for the SFP+ port that is used by the device.

Table 36. SFP+ Pin Assignments, Schematic Signal Names, and Functions

Board Reference (J12)	Schematic Signal Name	FPGA Pin Number	I/O Standard	Description
6	SFP_3P3V_MOD0_PRSNTN	AT30	1.8 V	Module present indicator
7	SFP_3P3V_RS0	AN31	1.8 V	SFP+ rate select 0
9	SFP_3P3V_RS1	AT34	1.8 V	SFP+ rate select 1
8	SFP_3P3V_RX_LOS	AU30	1.8 V	Signal present indicator
3	SFP_3P3V_TX_DIS	AR35	1.8 V	Transmitter disable
2	SFP_3P3V_TX_FLT	AT35	1.8 V	Transmitter fault
12	SFP_RX_N	AA41	High Speed Differential I/O	Receiver data
13	SFP_RX_P	AA42	High Speed Differential I/O	Receiver data
5	SFP_SCL	—	High Speed Differential I/O	Serial 2-wire clock
4	SFP_SDA	—	High Speed Differential I/O	Serial 2-wire data
19	SFP_TX_N	AB43	High Speed Differential I/O	Transmitter data
18	SFP_TX_P	AB44	High Speed Differential I/O	Transmitter data

6.7.7. I²C

I²C supports communication between integrated circuits on a board. It is a simple two-wire bus that consists of a serial data line (SDA) and a serial clock (SCL). The MAX V and Arria 10 devices use the I²C for reading and writing to the character LCD. You can use the Arria 10 or MAX V as the I²C host to access the PLLs and clocks.

Figure 34. I²C Block Diagram

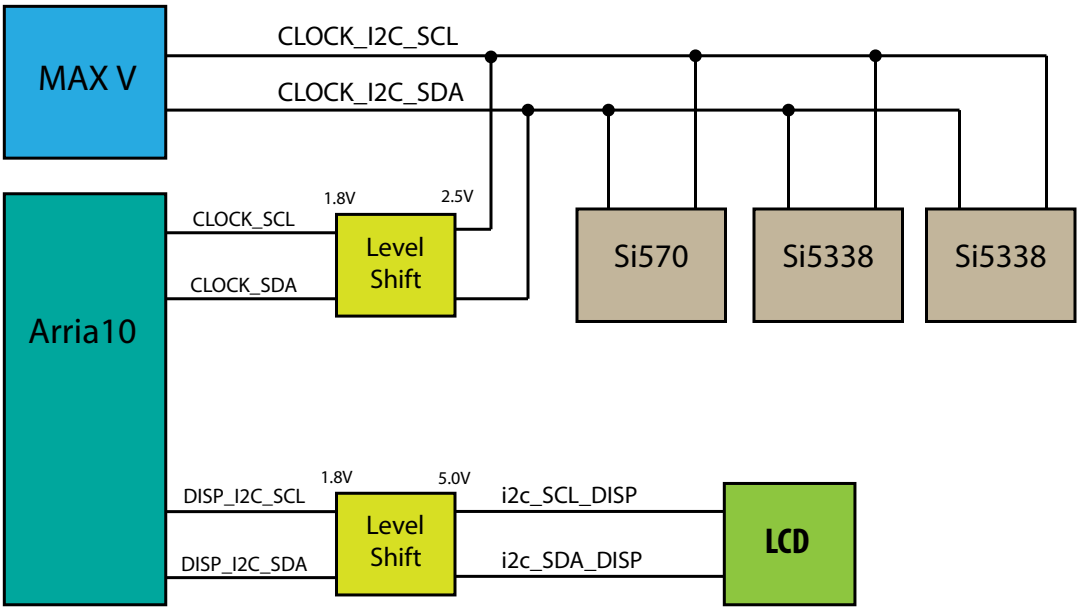

Table 37. MAX V I²C Signals

Schematic Signal Name	Pin Number	I/O Standard	Description
CLOCK_I2C_SCL	C12	2.5 V	I²C serial clock from MAX V.
CLOCK_I2C_SDA	C10	2.5 V	I²C serial data from MAX V.

Table 38. MAV I²C Level Shifter Signals to Arria 10 FPGA

Schematic Signal Name	Arria 10 Pin Number	I/O Standard	Description
CLOCK_SCL	AN30	1.8 V	Arria 10 FPGA I²C serial clock from MAX V level shifter.
CLOCK_SDA	AV33	1.8 V	Arria 10 FPGA I²C serial data from MAX V level shifter.

Table 39. Arria 10 I²C Signals

Schematic Signal Name	Pin Number	I/O Standard	Description
DISP_I2C_SCL	AW33	1.8 V	Arria 10 I²C serial clock to level shifter.
DISP_I2C_SDA	AY34	1.8 V	Arria 10 I²C serial data to level shifter.

Table 40. Arria 10 I²C Level Shifter to LCD Signals

Schematic Signal Name	LCD Pin Number	I/O Standard	Description
I2C_SCL_DISP	7	5.0 V	LCD I²C serial clock from Arria 10 FPGA level shifter.
I2C_SDA_DISP	8	5.0 V	LCD I²C serial data from Arria 10 FPGA level shifter.

6.8. Memory

This section describes the development board's memory interface support and also their signal names, types, and connectivity relative to the FPGA.

6.8.1. Flash

The Arria 10 GX FPGA development board supports two 1 Gb CFI-compatible synchronous flash devices for non-volatile storage of FPGA configuration data, board information, test application data, and user code space. These devices are part of the shared FM bus that connects to the flash memory and MAX V CPLD EPM2210 System Controller.

Table 41. Default Memory Map of two 1-Gb CFI Flash Devices

Block Description	Size (KB)	Address Range
Board test system scratch	512	0x0a10.0000 - 0x0a17.FFFF
User software	14, 336	0x0930.0000 - 0x0A0F.FFFF
Factory software	8, 192	0x08b0.0000 - 0x092F.FFFF
Zips (html, web content)	8, 192	0x0830.0000 - 0x08AF.FFFF
User hardware2	44, 032	0x0580.0000 – 0x082F.FFFF
User hardware1	44, 032	0x02D0.0000 – 0x057F.FFFF
Factory hardware	44, 032	0x0020.0000 – 0x02CF.FFFF
PFL option bits	512	0x0018.0000 – 0x001F.FFFF
Board information	512	0x0010.0000 – 0x0017.FFFF
Ethernet option bits	512	0x0008.0000 – 0x000F.FFFF
User design reset vector	512	0x0000.0000 – 0x0007.FFFF

Table 42. Flash Pin Assignments, Schematic Signal Names, and Functions

Board Reference	Schematic Signal Name	FPGA Pin Number	I/O Standard	Description
F6	FLASH_ADVN	BB22	1.8 V	Address valid
B4	FLASH_CEN1	BB23	1.8 V	Chip enable
E6	FLASH_CLK	BB25	1.8 V	Clock
F8	FLASH_OEN	BC26	1.8 V	Output enable
F7	FLASH_RDYBSYN1	AV23	1.8 V	Ready
D4	FLASH_RESETN	BA23	1.8 V	Reset
G8	FLASH_WEN	BD26	1.8 V	Write enable
C6	FLASH_WPN	—	1.8 V	Write protect
A1	FM_A1	AM11	1.8 V	Address bus
B1	FM_A2	AM12	1.8 V	Address bus
C1	FM_A3	AL12	1.8 V	Address bus
D1	FM_A4	AN13	1.8 V	Address bus

continued...

Board Reference	Schematic Signal Name	FPGA Pin Number	I/O Standard	Description
D2	FM_A5	AM13	1.8 V	Address bus
A2	FM_A6	AE12	1.8 V	Address bus
C2	FM_A7	AN15	1.8 V	Address bus
A3	FM_A8	AL10	1.8 V	Address bus
B3	FM_A9	AR10	1.8 V	Address bus
C3	FM_A10	AP11	1.8 V	Address bus
D3	FM_A11	AL13	1.8 V	Address bus
C4	FM_A12	AH11	1.8 V	Address bus
A5	FM_A13	AN14	1.8 V	Address bus
B5	FM_A14	AG11	1.8 V	Address bus
C5	FM_A15	AH10	1.8 V	Address bus
D7	FM_A16	AF14	1.8 V	Address bus
D8	FM_A17	AF15	1.8 V	Address bus
A7	FM_A18	AH14	1.8 V	Address bus
B7	FM_A19	AJ12	1.8 V	Address bus
C7	FM_A20	AJ14	1.8 V	Address bus
C8	FM_A21	AH13	1.8 V	Address bus
A8	FM_A22	AG12	1.8 V	Address bus
G1	FM_A23	AJ13	1.8 V	Address bus
H8	FM_A24	AF12	1.8 V	Address bus
B6	FM_A25	AK14	1.8 V	Address bus
B8	FM_A26	AK11	1.8 V	Address bus
F2	FM_D16	AT25	1.8 V	Data bus
E2	FM_D17	BA19	1.8 V	Data bus
G3	FM_D18	BA20	1.8 V	Data bus
E4	FM_D19	AP24	1.8 V	Data bus
E5	FM_D20	AP23	1.8 V	Data bus
G5	FM_D21	BA18	1.8 V	Data bus
G6	FM_D22	AT24	1.8 V	Data bus
H7	FM_D23	BD19	1.8 V	Data bus
E1	FM_D24	AU23	1.8 V	Data bus
E3	FM_D25	AR24	1.8 V	Data bus
F3	FM_D26	AT23	1.8 V	Data bus
F4	FM_D27	AR25	1.8 V	Data bus
F5	FM_D28	AP22	1.8 V	Data bus

continued...

Board Reference	Schematic Signal Name	FPGA Pin Number	I/O Standard	Description
H5	FM_D29	BC19	1.8 V	Data bus
G7	FM_D30	AU22	1.8 V	Data bus
E7	FM_D31	BA17	1.8 V	Data bus

6.8.2. Programming the Flash Using Quartus Programmer

You can use the Quartus Programmer to program the flash with your Programmer Object File (**.pof**).

Ensure the following conditions are met before you proceed:

- The Quartus Programmer and the USB-Blaster II driver are installed on the host computer.
- The micro-USB cable is connected to the FPGA development board.
- Power to the board is on, and no other applications that use the JTAG chain are running.
- The design running in the FPGA does not drive the FM bus.

Execute the steps below to program the Flash

1. Start the Quartus Programmer.
2. Click **Auto Detect** to display the devices in the JTAG chain.
3. Select the flash attached to the MAX V and then click **Change File** and select the path to the desired **.pof**. If the flash is not detected, configure the FPGA with `<package root directory>\examples\board_test_system\image\<Silicon Type>\dummy.sof` and then go to step 2, refer to **Configuring the FPGA Using Programmer.**
4. Turn on the **Program/Configure** option for the added file.
5. Click **Start** to program the selected file to the flash. Programming is complete when the progress bar reaches 100%.

Attention: Using the Quartus Programmer to program a device on the board causes other JTAG-based applications such as the Board Test System and the Power Monitor to lose their connection to the board. Restart those applications after programming is complete.

6.9. Board Power Supply

This section describes the Arria 10 GX FPGA development board's power supply. A laptop style DC power supply is provided with the development kit. Use only the supplied power supply. The power supply has an auto sensing input voltage range of 100 ~ 240 VAC and will output 12 VDC power at 16 A to the development board. The 12 VDC input power is then stepped down to various power rails used by the board components.

An on-board multi-channel analog-to-digital converter (ADC) measures both the voltage and current for several specific board rails. The power utilization is displayed on a graphical user interface (GUI) that can graph power consumption versus time.

6.9.1. Power Distribution System

The following figure below shows the power distribution system on the A10 FPGA development board. Regulator efficiencies and sharing are reflected in the currents shown, which are at conservative absolute maximum levels.

Figure 35. Power Distribution System Block Diagram (ES Edition)

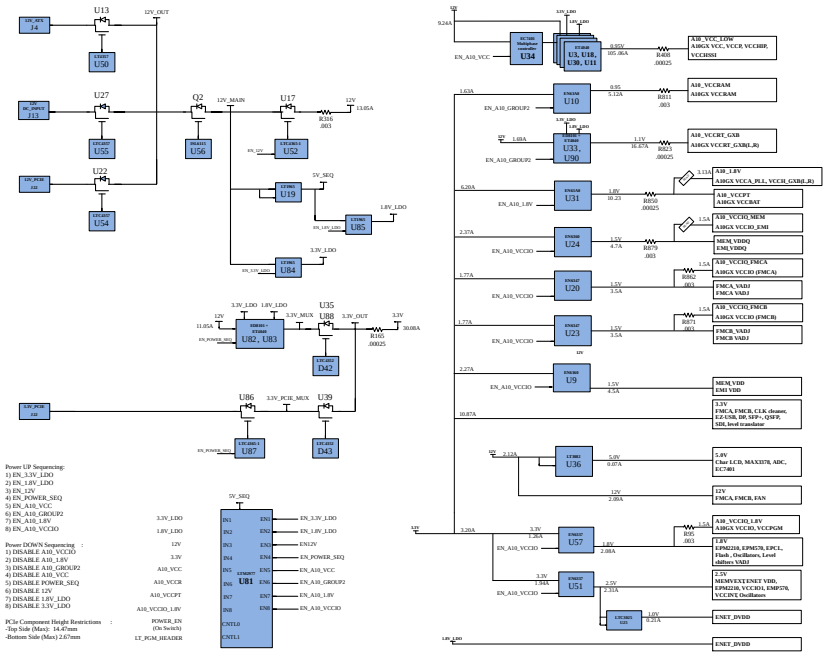

Figure 36. Power Distribution System Block Diagram

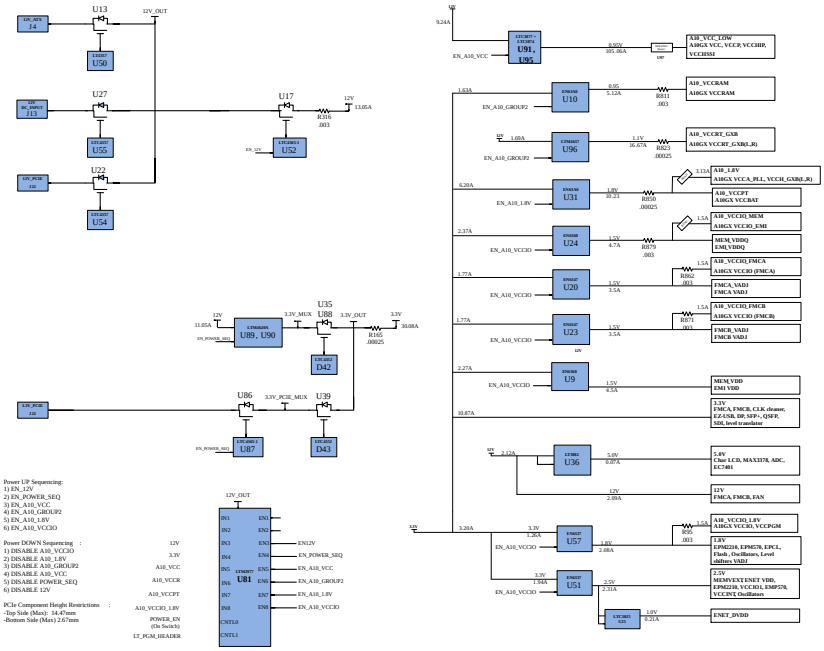

6.9.2. Power Measurement

There are 8 power supply rails that have on-board voltage, current, and wattage sense capabilities using 24-bit differential ADC devices. Precision sense resistors split the ADC devices and rails from the primary supply plane for the ADC to measure voltage and current. A SPI bus connects these ADC devices to the MAX V CPLD EPM2210 System Controller as well as the Arria 10 GX FPGA.

6.10. Daughtercards

The Arria 10 development kit provides a full-featured hardware development platform for prototyping and testing high-speed serial interfaces to an Arria 10 GX FPGA.

Table 43. Arria 10 FPGA Development Kit Daughtercards

Memory Type	Transfer Rate (Mbps)	Maximum Frequency (MHz)
DDR3	2,133	1,066
DDR4	2,666	1,333
RLDRAM 3	2,400	1,200
QDR-IV	2,133	1,066
FMC Loopback	14,200	7,100

Related Information

I/O and High Speed I/O Arria 10 Devices

6.10.1. External Memory Interface

Related Information

Arria 10 FPGA and SoC External Memory Resources

6.10.1.1. DDR3L

The DDR3L x 72 SDRAM (DDR3 Low Voltage)

Figure 37. DDR3 Block Diagram

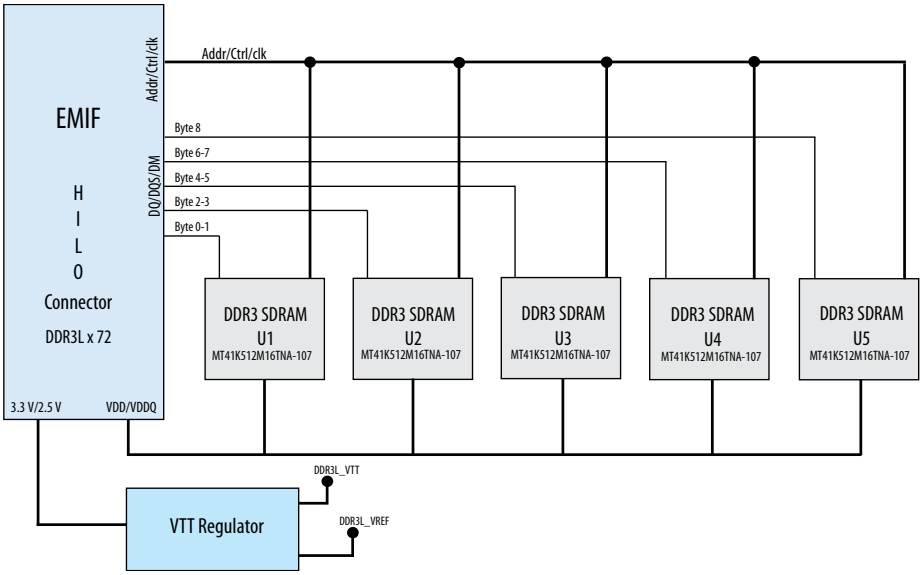

6.10.1.2. DDR4

DDR4 x 72 SDRAM

Figure 38. DDR4 Block Diagram

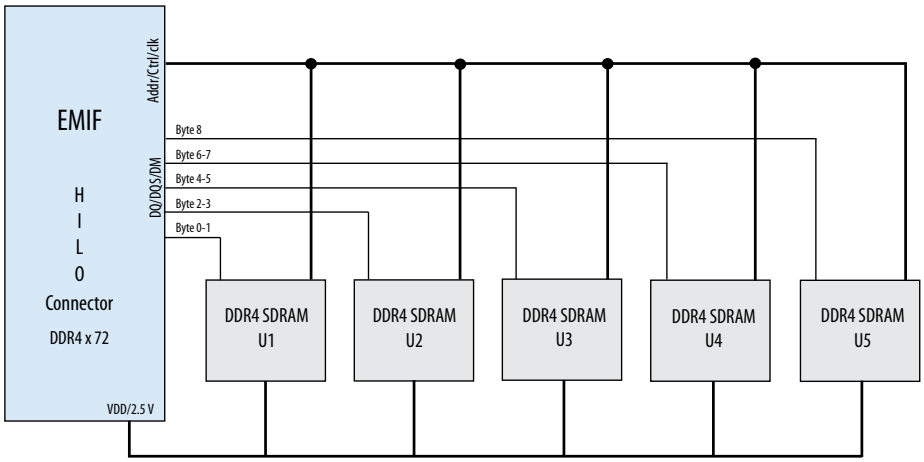

6.10.1.3. RLDRAM 3

The RLDRAM 3 x 36 (reduced latency DRAM) controller is designed for use in applications requiring high memory throughput, high clock rates and full programmability.

Figure 39. RLDRAM 3 Block Diagram

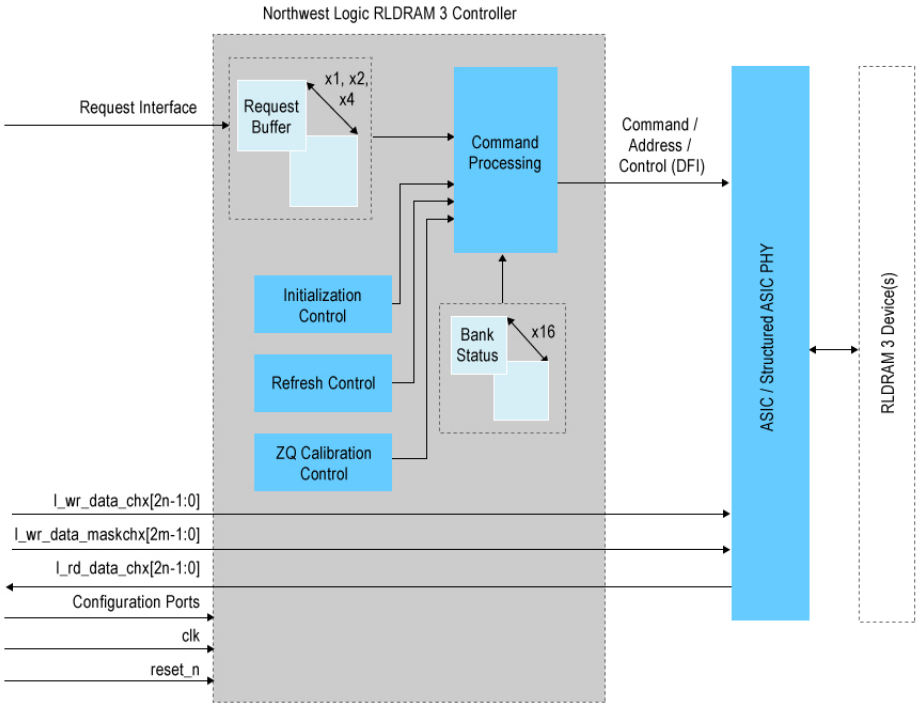

6.10.1.4. QDR-IV

QDR-IV x 36 SRAM devices enable you to maximize memory bandwidth with separate read and write ports.

Figure 40. QDR-IV Block Diagram

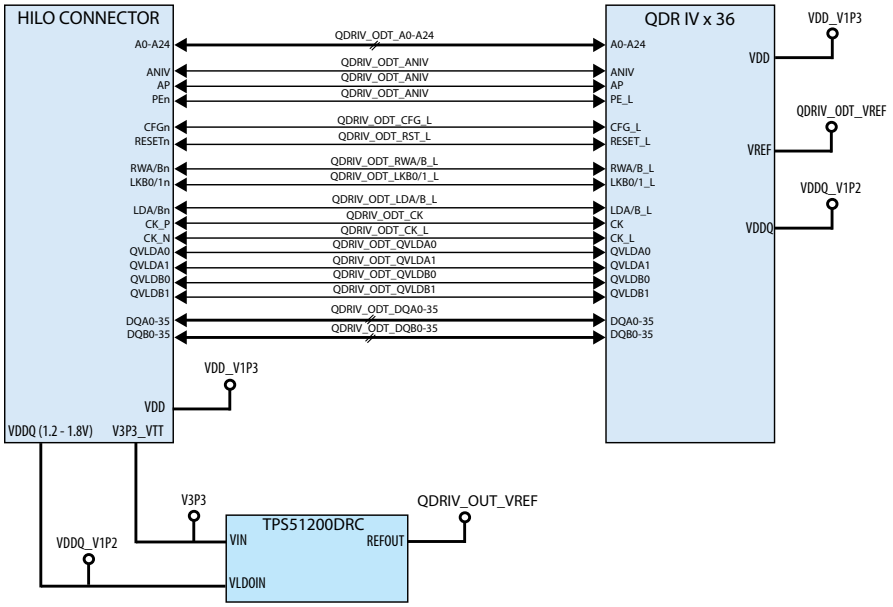

6.10.1.5. FMC Loopback Card

The Arria 10 FPGA development kit provides two FMC mezzanine interface ports connected to the Arria 10 FPGA for interfacing to Altera FMC add-in boards as shown in the figure below. The Altera FMC interface is mechanically compliant with the Vita57.1 specification for attaching a double width mezzanine module. However, in terms of signal connections, the Altera FMC interface is not fully compliant with the Vita 57.1 specification. Instead, it contains a subset of the Vita57.1 interface signal to the connector as shown in the FMCA and FMCB signal assignments tables.

Figure 41. Arria 10 FPGA Development Kit FMC Block Diagram

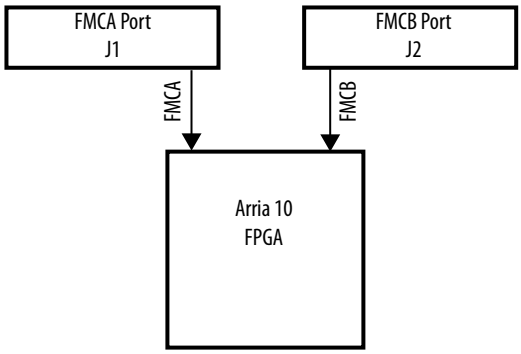

The following shows the complete signal connections assigned for each Altera FMC interface at the FMCA port (J1) and FMCB port (J2). For the signal connections to the FPGA device, refer to Table 33 on page 86.

Table 44. FMCA Connector (J1) Signal Assignments

	K	J	H	G	F	E	D	C	B	A
1	NC	GND	VREF_FMCA	GND	FMCA_M2C_PG	GND	FMCA_C2M_PG	GND	NC	GND
2	GND	NC	FMCA_PRSNTn	FMCA_CLK_M2C_P1	GND	NC	GND	FMCA_DP_C2M_P0	GND	FMCA_DP_M2C_P1
3	GND	NC	GND	FMCA_CLK_M2C_N1	GND	NC	GND	FMCA_DP_C2M_N0	GND	FMCA_DP_M2C_N1
4	FMCA_DP_M2C_P10	GND	FMCA_CLK_M2C_P0	GND	NC	GND	FMCA_GBTCLK_M2C_P0	GND	FMCA_DP_M2C_P9	GND
5	FMCA_DP_M2C_N10	GND	FMCA_CLK_M2C_N0	GND	NC	GND	FMCA_GBTCLK_M2C_N0	GND	FMCA_DP_M2C_N9	GND
6	GND	NC	GND	FMCA_LA_RX_CLK_P0	GND	NC	GND	FMCA_DP_M2C_P0	GND	FMCA_DP_M2C_P2
7	FMCA_DP_M2C_P11	GND	FMCA_LA_TX_P0	FMCA_LA_RX_CLK_N0	NC	NC	GND	FMCA_DP_M2C_N0	GND	FMCA_DP_M2C_N2
8	FMCA_DP_M2C_N11	GND	FMCA_LA_TX_N0	GND	NC	GND	FMCA_LA_RX_CLK_P1	GND	FMCA_DP_M2C_P8	GND
9	GND	NC	GND	FMCA_LA_RX_P0	GND	NC	FMCA_LA_RX_CLK_N1	GND	FMCA_DP_M2C_N8	GND
10	FMCA_DP_M2C_P12	GND	FMCA_LA_TX_P1	FMCA_LA_RX_N0	NC	NC	GND	FMCA_LA_RX_P1	GND	FMCA_DP_M2C_P3
11	FMCA_DP_M2C_N12	GND	FMCA_LA_TX_N1	GND	NC	GND	FMCA_LA_TX_P2	FMCA_LA_RX_N1	GND	FMCA_DP_M2C_N3
12	GND	NC	GND	FMCA_LA_RX_P2	GND	NC	FMCA_LA_TX_N2	GND	FMCA_DP_M2C_P7	GND

continued...

	K	J	H	G	F	E	D	C	B	A
13	FMCA_DP_M2C_P13	GND	FMCA_LA_TX_P3	FMCA_LA_RX_N2	NC	NC	GND	GND	FMCA_DP_M2C_N7	GND
14	FMCA_DP_M2C_N13	GND	FMCA_LA_TX_N3	GND	NC	GND	FMCA_LA_TX_P4	FMCA_LA_RX_P3	GND	FMCA_DP_M2C_P4
15	GND	NC	GND	FMCA_LA_RX_P4	GND	NC	FMCA_LA_TX_N4	FMCA_LA_RX_N3	GND	FMCA_DP_M2C_N4
16	FMCA_DP_M2C_P14	GND	FMCA_LA_TX_P5	FMCA_LA_RX_N4	NC	NC	GND	GND	FMCA_DP_M2C_P6	GND
17	FMCA_DP_M2C_N14	GND	FMCA_LA_TX_N5	GND	NC	GND	FMCA_LA_TX_P6	GND	FMCA_DP_M2C_N6	GND
18	GND	NC	GND	FMCA_LA_RX_P6	GND	NC	FMCA_LA_TX_N6	FMCA_LA_RX_P5	GND	FMCA_DP_M2C_P5
19	FMCA_DP_M2C_P15	GND	FMCA_LA_TX_P7	FMCA_LA_RX_N6	NC	NC	GND	FMCA_LA_RX_N5	GND	FMCA_DP_M2C_N5
20	FMCA_DP_M2C_N15	GND	FMCA_LA_TX_N7	GND	NC	GND	FMCA_LA_TX_P8	GND	FMCA_GBTCLK_M2C_P1	GND
21	GND	NC	GND	FMCA_LA_RX_P8	GND	NC	FMCA_LA_TX_N8	GND	FMCA_GBTCLK_M2C_N1	GND
22	FMCA_DP_C2M_P10	GND	FMCA_LA_TX_P9	FMCA_LA_RX_N8	NC	NC	GND	FMCA_LA_RX_P7	GND	FMCA_DP_C2M_P1
23	FMCA_DP_C2M_N10	GND	FMCA_LA_TX_N9	GND	NC	GND	FMCA_LA_TX_P11	FMCA_LA_RX_N7	GND	FMCA_DP_C2M_N1
24	GND	NC	GND	FMCA_LA_RX_P9	GND	NC	FMCA_LA_TX_N11	GND	FMCA_DP_C2M_P9	GND
25	FMCA_DP_C2M_P11	GND	FMCA_LA_TX_P10	FMCA_LA_RX_N9	NC	NC	GND	GND	FMCA_DP_C2M_N9	GND
26	FMCA_DP_C2M_N11	GND	FMCA_LA_TX_N10	GND	NC	GND	FMCA_LA_TX_P13	FMCA_LA_RX_P11	GND	FMCA_DP_C2M_P2
27	GND	NC	GND	FMCA_LA_RX_P10	GND	NC	FMCA_LA_TX_N13	FMCA_LA_RX_N11	GND	FMCA_DP_C2M_N2
28	FMCA_DP_C2M_P12	GND	FMCA_LA_TX_P12	FMCA_LA_RX_N10	NC	NC	GND	GND	FMCA_DP_C2M_P8	GND
29	FMCA_DP_C2M_N12	GND	FMCA_LA_TX_N12	GND	NC	GND	FMCA_JTAG_TCK	GND	FMCA_DP_C2M_N8	GND
30	GND	NC	GND	FMCA_LA_RX_P12	GND	NC	FMCA_JTAG_TDI	FMCA_3P3V_SCL	GND	FMCA_DP_C2M_P3
31	FMCA_DP_C2M_P13	GND	FMCA_LA_TX_P14	FMCA_LA_RX_N12	NC	NC	FMCA_JTAG_TDO	FMCA_3P3V_SDA	GND	FMCA_DP_C2M_N3
32	FMCA_DP_C2M_N13	GND	FMCA_LA_TX_N14	GND	NC	GND	3.3V	GND	FMCA_DP_C2M_P7	GND
33	GND	NC	GND	FMCA_LA_RX_P13	GND	NC	FMCA_JTAG_TMS	GND	FMCA_DP_C2M_N7	GND
34	FMCA_DP_C2M_P14	GND	FMCA_LA_TX_P15	FMCA_LA_RX_N13	NC	NC	FMCA_JTAG_RST	FMCA_GA0	GND	FMCA_DP_C2M_P4
35	FMCA_DP_C2M_N14	GND	FMCA_LA_TX_N15	GND	NC	GND	FMCA_GA1	12V	GND	FMCA_DP_C2M_N4
36	GND	NC	GND	FMCA_LA_RX_P14	GND	NC	3.3V	GND	FMCA_DP_C2M_P6	GND
37	FMCA_DP_C2M_P15	GND	FMCA_LA_TX_P16	FMCA_LA_RX_N14	NC	NC	GND	12V	FMCA_DP_C2M_N6	GND
38	FMCA_DP_C2M_N15	GND	FMCA_LA_TX_N16	GND	NC	GND	3.3V	GND	GND	FMCA_DP_C2M_P5

continued...

	K	J	H	G	F	E	D	C	B	A
39	GND	NC	GND	A10_VCCIO_FMCA	GND	A10_VCCIO_FMCA	GND	3.3V	GND	FMCA_DP_C2M_N5
40	NC	GND	A10_VCCIO_FMCA	GND	A10_VCCIO_FMCA	GND	3.3V	GND	NC	GND
			LPC Connector	LPC Connector			HPC Connector	HPC Connector		

Table 45. FMCB Connector (J2) Signals Assignments

	K	J	H	G	F	E	D	C	
1	NC	GND	VREF_FMCB	GND	FMCB_M2C_PG	GND	FMCB_C2M_PG	GND	NC
2	GND	NC	FMCB_PRSNTn	FMCB_CLK_M2C_P1	GND	NC	GND	FMCB_DP_C2M_P0	GND
3	GND	NC	GND	FMCB_CLK_M2C_N1	GND	NC	GND	FMCB_DP_C2M_N0	GND
4	FMCB_DP_M2C_P10	GND	FMCB_CLK_M2C_P0	GND	NC	GND	FMCB_GBTCLK_M2C_P0	GND	FMCB_DP
5	FMCB_DP_M2C_N10	GND	FMCB_CLK_M2C_N0	GND	NC	GND	FMCB_GBTCLK_M2C_N0	GND	FMCB_DP
6	GND	NC	GND	FMCB_LA_RX_CLK_P0	GND	NC	GND	FMCB_DP_M2C_P0	GND
7	FMCB_DP_M2C_P11	GND	FMCB_LA_TX_P0	FMCB_LA_RX_CLK_N0	NC	NC	GND	FMCB_DP_M2C_N0	GND
8	FMCB_DP_M2C_N11	GND	FMCB_LA_TX_N0	GND	NC	GND	FMCB_LA_RX_CLK_P1	GND	FMCB_DP
9	GND	NC	GND	FMCB_LA_RX_P0	GND	NC	FMCB_LA_RX_CLK_N1	GND	FMCB_DP
10	FMCB_DP_M2C_P12	GND	FMCB_LA_TX_P1	FMCB_LA_RX_N0	NC	NC	GND	FMCB_LA_RX_P1	GND
11	FMCB_DP_M2C_N12	GND	FMCB_LA_TX_N1	GND	NC	GND	FMCB_LA_TX_P2	FMCB_LA_RX_N1	GND
12	GND	NC	GND	FMCB_LA_RX_P2	GND	NC	FMCB_LA_TX_N2	GND	FMCB_DP
13	FMCB_DP_M2C_P13	GND	FMCB_LA_TX_P3	FMCB_LA_RX_N2	NC	NC	GND	GND	FMCB_DP
14	FMCB_DP_M2C_N13	GND	FMCB_LA_TX_N3	GND	NC	GND	FMCB_LA_TX_P4	FMCB_LA_RX_P3	GND
15	GND	NC	GND	FMCB_LA_RX_P4	GND	NC	FMCB_LA_TX_N4	FMCB_LA_RX_N3	GND
16	FMCB_DP_M2C_P14	GND	FMCB_LA_TX_P5	FMCB_LA_RX_N4	NC	NC	GND	GND	FMCB_DP
17	FMCB_DP_M2C_N14	GND	FMCB_LA_TX_N5	GND	NC	GND	FMCB_LA_TX_P6	GND	FMCB_DP
18	GND	NC	GND	FMCB_LA_RX_P6	GND	NC	FMCB_LA_TX_N6	FMCB_LA_RX_P5	GND
19	FMCB_DP_M2C_P15	GND	FMCB_LA_TX_P7	FMCB_LA_RX_N6	NC	NC	GND	FMCB_LA_RX_N5	GND
20	FMCB_DP_M2C_N15	GND	FMCB_LA_TX_N7	GND	NC	GND	FMCB_LA_TX_P8	GND	FMCB_GB
21	GND	NC	GND	FMCB_LA_RX_P8	GND	NC	FMCB_LA_TX_N8	GND	FMCB_GB
22	FMCB_DP_C2M_P10	GND	FMCB_LA_TX_P9	FMCB_LA_RX_N8	NC	NC	GND	FMCB_LA_RX_P7	GND
23	FMCB_DP_C2M_N10	GND	FMCB_LA_TX_N9	GND	NC	GND	FMCB_LA_TX_P11	FMCB_LA_RX_N7	GND
24	GND	NC	GND	FMCB_LA_RX_P9	GND	NC	FMCB_LA_TX_N11	GND	FMCB_DP
25	FMCB_DP_C2M_P11	GND	FMCB_LA_TX_P10	FMCB_LA_RX_N9	NC	NC	GND	GND	FMCB_DP
26	FMCB_DP_C2M_N11	GND	FMCB_LA_TX_N10	GND	NC	GND	FMCB_LA_TX_P13	FMCB_LA_RX_P11	GND
27	GND	NC	GND	FMCB_LA_RX_P10	GND	NC	FMCB_LA_TX_N13	FMCB_LA_RX_N11	GND
28	FMCB_DP_C2M_P12	GND	FMCB_LA_TX_P12	FMCB_LA_RX_N10	NC	NC	GND	GND	FMCB_DP
29	FMCB_DP_C2M_N12	GND	FMCB_LA_TX_N12	GND	NC	GND	FMCB_JTAG_TCK	GND	FMCB_DP
30	GND	NC	GND	FMCB_LA_RX_P12	GND	NC	FMCB_JTAG_TDI	FMCB_3P3V_SCL	GND
31	FMCB_DP_C2M_P13	GND	FMCB_LA_TX_P14	FMCB_LA_RX_N12	NC	NC	FMCB_JTAG_TDO	FMCB_3P3V_SDA	GND
32	FMCB_DP_C2M_N13	GND	FMCB_LA_TX_N14	GND	NC	GND	3.3V	GND	FMCB_DP
33	GND	NC	GND	FMCB_LA_RX_P13	GND	NC	FMCB_JTAG_TMS	GND	FMCB_DP
34	FMCB_DP_C2M_P14	GND	FMCB_LA_TX_P15	FMCB_LA_RX_N13	NC	NC	FMCB_JTAG_RST	FMCB_GA0	GND

	K	J	H	G	F	E	D	C	B
35	FMCB_DP_C2M_N14	GND	FMCB_LA_TX_N15	GND	NC	GND	FMCB_GA1	12V	GND
36	GND	NC	GND	FMCB_LA_RX_P14	GND	NC	3.3V	GND	FMCB_DP_C2
37	FMCB_DP_C2M_P15	GND	FMCB_LA_TX_P16	FMCB_LA_RX_N14	NC	NC	GND	12V	FMCB_DP_C2
38	FMCB_DP_C2M_N15	GND	FMCB_LA_TX_N16	GND	NC	GND	3.3V	GND	GND
39	GND	NC	GND	A10_VCCIO_FMCB	GND	A10_VCCIO_FMCB	GND	3.3V	GND
40	NC	GND	A10_VCCIO_FMCB	GND	A10_VCCIO_FMCB	GND	3.3V	GND	NC
			LPC Connector	LPC Connector			HPC Connector	HPC Connector	

6.10.1.5.1. High Pin Count (HBC)

The High Pin Count FMC connections are assigned to columns G and H in both the FMCA (J1) and FMCB (J2) connectors as shown. The HPC signaling follows the Vita57.1 standard.

6.10.1.5.2. Low Pin Count (LPC)

The Low Pin Count FMC connections are assigned to columns C and D in both the FMCA (J1) and FMCB (J2) connectors as shown. The LPC signaling follows the Vita57.1 standard.

A. Additional Information

A.1. Document Revision History for the Intel Arria 10 FPGA Development Kit User Guide

Document Version	Changes
2023.07.12	• Retitled the document from *Arria 10 FPGA Development Kit User Guide* to *Intel Arria 10 FPGA Development Kit User Guide*. • Minor text edits.
2023.07.11	Updated the supported I/O standard for *X1* and *X2* in Table: *On-Board Oscillators*.
2021.03.19	Updated Board Overview on page 55 [J14 - DDR4 memory (x72) 1200 MHz]
2017.09.21	Updated contents of FACTORY switch in SW6 DIP Switch Default Settings Table in Default Switch and Jumper Settings on page 12.
2017.08.08	Added a Caution note to Handling the Board on page 7.
2017.07.25	• Updated FMC on page 86 of Board Components. • Changed all 1.4V PCML I/O Standard to "High Speed Differential I/O" throughout the User Guide. • Updated Development Kit Package on page 9 section to remove references to installer.
2016.05.02	• Added "Programming the Flash Using Quartus Programmer" section. • Updated the Arria 10 FPGA Development Kit block diagram.
2016.03.18	Production release.

Intel Corporation. All rights reserved. Intel, the Intel logo, and other Intel marks are trademarks of Intel Corporation or its subsidiaries. Intel warrants performance of its FPGA and semiconductor products to current specifications in accordance with Intel's standard warranty, but reserves the right to make changes to any products and services at any time without notice. Intel assumes no responsibility or liability arising out of the application or use of any information, product, or service described herein except as expressly agreed to in writing by Intel. Intel customers are advised to obtain the latest version of device specifications before relying on any published information and before placing orders for products or services.
*Other names and brands may be claimed as the property of others.

ISO 9001:2015 Registered

A.2. Compliance and Conformity Statements

A.2.1. CE EMI Conformity Caution

This board is delivered conforming to relevant standards mandated by Directive 2004/108/EC. Because of the nature of programmable logic devices, it is possible for the user to modify the kit in such a way as to generate electromagnetic interference (EMI) that exceeds the limits established for this equipment. Any EMI caused as the result of modifications to the delivered material is the responsibility of the user.

Intel® Arria® 10 SoC Development Kit User Guide

Online Version

Send Feedback

UG-20004

683227

2023.07.12

Contents

1. Intel® Arria® 10 SoC Development Kit Overview....4
1.1. General Description....4
1.2. Board Component Blocks....6
1.3. Recommended Operating Conditions....8
1.4. Handling the Board....9

2. Getting Started....10
2.1. Board Inspection....10
2.2. Installing the Subscription Edition of the Quartus Prime Design Software....11
2.2.1. Activating Your License....12
2.3. Installing the Altera SoC Embedded Development Suite (EDS)....12
2.4. Development Kit Installer....13
2.5. Installing the USB-Blaster Driver....13
2.6. SD Card Image with Example Software....14

3. Development Board Setup....15
3.1. Applying Power to the Board....15
3.2. Default Switch and Jumper Settings....16

4. Board Test System....20
4.1. Preparing the Board....21
4.2. Running the Board Test System....22
4.3. Version Selector....22
4.4. Using the Board Test System....24
4.4.1. Using the Configure Menu....24
4.4.2. The System Info Tab....26
4.4.3. The GPIO Tab....27
4.4.4. The XCVR Tab....28
4.4.5. The PCIe Tab....30
4.4.6. The FMCA Tab....33
4.4.7. The FMCB Tab....36
4.4.8. The DDR3 Tab....40
4.4.9. The DDR4 Tab....42
4.4.10. The EEPROM Tab....43
4.4.11. The Power Monitor....44
4.4.12. The Clock Control....46

5. Board Components....48
5.1. Board Overview....48
5.2. Featured Device: Arria 10 SoC....51
5.3. MAX V CPLD 5M2210 System Controller....52
5.4. Configuration....60
5.4.1. System Controller Configuration....60
5.4.2. FPGA and I/O MUX CPLD Programming over On-Board USB-Blaster II....61
5.4.3. FPGA Programming by HPS....63
5.4.4. FPGA Programming by EPCQ Device....63
5.4.5. FPGA Programming over External USB-Blaster....63
5.5. Status Elements....64

5.6. Setup Elements.....64
5.6.1. Board Settings DIP Switch.....64
5.6.2. JTAG Chain Control DIP Switch.....65
5.6.3. Reference Clock Source Selection.....67
5.6.4. CPU Reset Push Button.....67
5.6.5. Logic Reset Push Button.....67
5.7. General User Input/Output.....67
5.7.1. Character LCD.....68
5.8. Clock Circuitry.....69
5.8.1. On-Board Oscillators.....69
5.9. Components and Interfaces.....70
5.9.1. PCI Express.....70
5.9.2. 10/100/1000 Ethernet (HPS).....72
5.9.3. 10/100/1000 Ethernet (FPGA).....74
5.9.4. FMC.....75
5.9.5. HPS Shared I/O.....88
5.9.6. USB 2.0 Port (HPS).....90
5.9.7. RS-232 UART (HPS).....90
5.9.8. Real-Time Clock (HPS).....91
5.9.9. SFP+.....91
5.9.10. I^2C Interface.....92
5.9.11. FPGA General I/O Configuration.....93
5.9.12. HPS SPIO Interface.....100
5.10. Memory.....105
5.10.1. FPGA External Memory.....106
5.10.2. HPS External Memory.....112
5.10.3. HPS Boot Flash Interface.....115
5.10.4. I^2C EEPROM.....115
5.10.5. Daughtercards.....116
5.11. Board Power Supply.....117
5.11.1. Power Distribution System.....118
5.11.2. Power Measurement.....118

A. Additional Information.....119
A.1. Document Revision History for the Intel Arria 10 SoC Development Kit User Guide.....119
A.2. Compliance and Conformity Statements.....121
A.2.1. CE EMI Conformity Caution.....121

683227 | 2023.07.12

Send Feedback

1. Intel® Arria® 10 SoC Development Kit Overview

This document describes the hardware features of the Intel® Arria® 10 SoC development board, including the detailed pin-out and component reference information required to create custom FPGA designs that interface with all components of the board.

1.1. General Description

The Arria 10 SoC development board provides a hardware platform for developing and prototyping low-power, high-performance, and logic-intensive designs using Altera's® Arria 10 SoC. The board provides a wide range of peripherals and memory interfaces to facilitate the development of Arria 10 SoC designs.

Figure 1. Arria 10 SoC Block Diagram

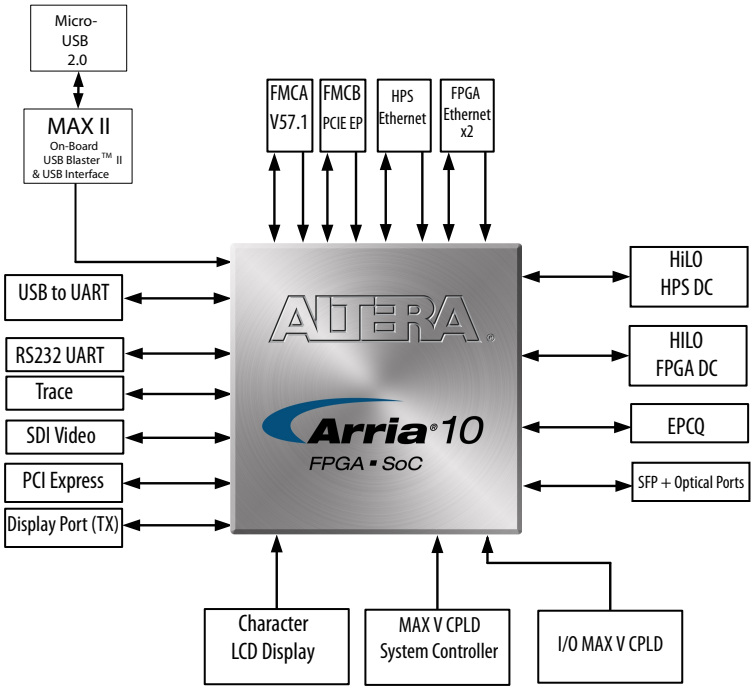

Intel Corporation. All rights reserved. Intel, the Intel logo, and other Intel marks are trademarks of Intel Corporation or its subsidiaries. Intel warrants performance of its FPGA and semiconductor products to current specifications in accordance with Intel's standard warranty, but reserves the right to make changes to any products and services at any time without notice. Intel assumes no responsibility or liability arising out of the application or use of any information, product, or service described herein except as expressly agreed to in writing by Intel. Intel customers are advised to obtain the latest version of device specifications before relying on any published information and before placing orders for products or services.
*Other names and brands may be claimed as the property of others.

ISO 9001:2015 Registered

Figure 2. Overview of the Development Board Features

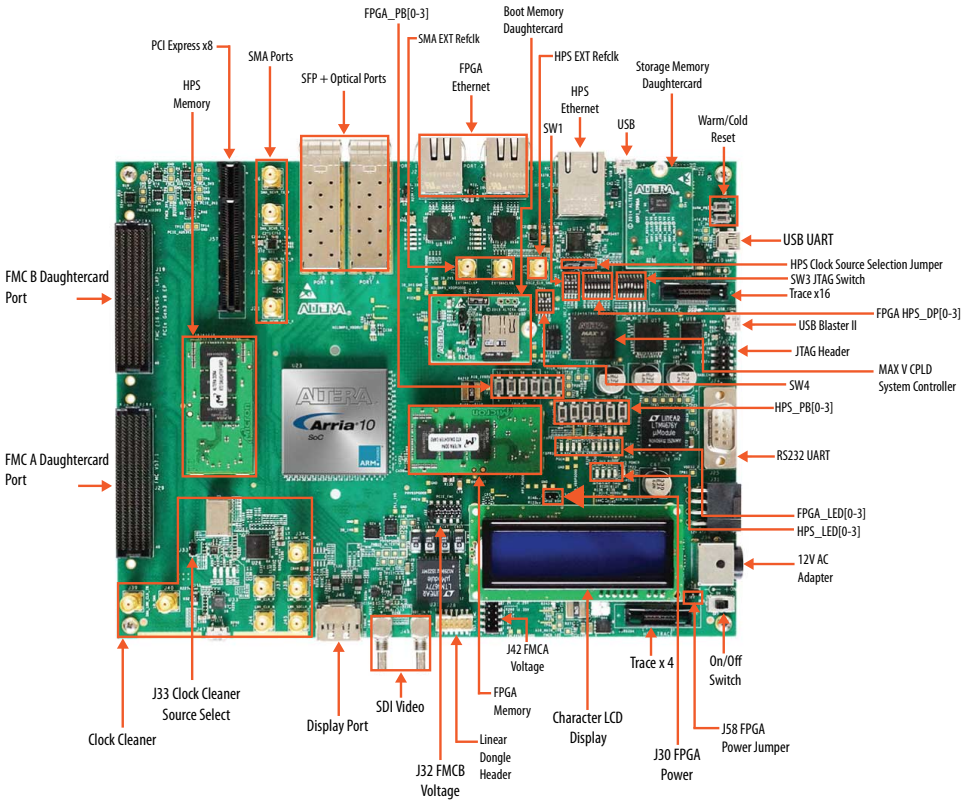

For more information about the Arria 10 SoC device family, refer to the Arria 10 SoC documentation support page.

Related Information

Arria 10 Documentation

1.2. Board Component Blocks

The development board features the following major component blocks:

- Arria 10 Soc (10AS066N3F40E2SG) in a 1517-pin FBGA (FineLine Ball-Grid Array) package
- FPGA configuration circuitry
  - Active Serial (AS) x1 or x4 configuration (EPCQ1024L)
  - MAX® V CPLD (5M2210ZF256) in a 256-pin FBGA package as the system controller
  - MAX V CPLD (5M2210ZF256) in a 256-pin FBGA package as the I/O multiplier CPLD
- Clocking circuitry
  - SI5338 programmable oscillator
  - LMK04828 clock cleaner
  - HPS clock options: 25 MHz, 33 MHz, and SMA input (2V5 LVCMOS)
  - SI5112 100MHz clock generator for PCIe interface
  - SI516 148.5 MHz voltage control oscillator for SDI interface
- Supported Memory
  - HPS memory size (HILO card):
    - 2GB DDR3 (256Mb x 40 x dual rank)
    - 1GB DDR3 (256Mb x 40 x single rank)
    - 1GB DDR4 (256Mb x 40 x single rank) - *ships with kit*
  - FPGA memory size (HILO Card):
    - 4GB DDR3 (256Mb x72 x dual rank)
    - 2GB DDR3 (256Mb x72 x single rank)
    - 2GB DDR4 (256Mb x 72 x single rank) - *ships with kit*
    - 16MB QDRV (4Mb x 36)
    - 128MB RLDRAM3(16Mb x 72)
  - HPS Boot Flash (Flash card):
    - NAND flash (x8) : 128MB (MT29F1G08ABBEAH4) - *ships with kit*
    - QSPI flash: 128MB (MT25QU01GBBA8E12-0SIT) - *ships with kit*
    - SD Micro flash card: 4GB (Kingston) - *ships with kit*
  - Optional FPGA File Flash (Flash card):
    - NAND flash (x8): 128MB (MT29F1G08ABBEAH4)
    - QSPI flash: 128MB (MT25QU01GBBA8E12-0SIT)
    - SD Micro flash card: 4GB (Kingston)

- Communication ports
  - HPS Communication ports:
    - USB 2.0 port (PHY PN: USB3320C-EZK)
    - RGMII 10/100/1000 Ethernet port (PHY PN: KSZ9031RNXCA)
    - USB-UART port (FT232R)
    - DB-9 RS-232 Port (MAX3221)
    - I^2C port (I2C1 of shared I/O bit 12 and 13)
  - FPGA I/O connections:
    - FPGA V57.1 High Pin Count FMC slot
    - FPGA Altera Low Pin Count FMC slot
    - FMC_PCIe Gen2 x8 EP cable
    - FPGA PCIe GEN1/2/3 x8 RC slot
  - FPGA Communication ports:
    - 2x SGMII Gigabit Ethernet ports (PHY PN: 88E1111-B2-NDC2C000)
    - 2x 10Gb/s SFP+ ports
    - Display port (DP)
    - SDI/SDO video port
    - SPI port
    - UART port
  - FPGA Debug ports:
    - 16-bit Trace port (FPGA Trace)

- General user I/O
  - LEDs and displays
    - 4x FPGA user LEDs
    - 4x HPS user LEDs
    - Configuration load LED
    - Configuration done LED
    - Error LED
    - 3x Configuration select LEDs
    - 4x On-board USB-Blaster II status LEDs
    - 2x FMC interface LEDs
    - 2x UART data transmit and receive LEDs
    - Power on LED
    - Two-line character LCD display
  - Push buttons
    - CPU cold reset push button and one CPU warm reset push button
    - Logic reset push button
    - Program select push button
    - Program configuration push button
    - 4x FPGA user push buttons
    - 4x HPS user push buttons
    - External interrupt push button
  - DIP Switches
    - JTAG chain control DIP switch
    - Board settings DIP switch
    - FPGA configuration mode DIP switch
    - General user DIP switch
  - Power supply
    - 12V DC Input
  - Mechanical
    - 7.175" x 9.3" rectangular form factor

1.3. Recommended Operating Conditions

- Recommended ambient operating temperature range: 0C to 45C
- Maximum ICC load current: 36A
- Maximum ICC load transient percentage: 30%
- FPGA maximum power supported by the supplied heatsink/fan: 40W

1.4. Handling the Board

When handling the board, it is important to observe static discharge precautions.

Caution: Without proper anti-static handling, the board can be damaged. Therefore, use anti-static handling precautions when touching the board.

Caution: This development kit should not be operated in a Vibration Environment.

2. Getting Started

2.1. Board Inspection

To inspect each board, perform these steps:

1. Place the board on an anti-static surface and inspect it to ensure that it has not been damaged during shipment.

   Caution: Without proper anti-static handling, you can damage the board.

2. Verify that all components on the boards appear in place and intact.

For more information about power consumption and thermal modeling, refer to *AN358: Thermal Management for FPGAs*.

Table 1. Arria 10 SoC Development Kit Contents

Item	Quantity
Arria 10 SoC Development Board	1
USB Cable Mini	2
USB Cable Micro	1
Ethernet Cable	1
FMC Loopback Card	1
MicroSD Daughtercard	1
Quad SPI Daughtercard	1
NAND Daughtercard	1
DDR4 HILO Memory Card	2
Quick Start Guide	1

Related Information

AN358: Thermal Management for FPGAs

Intel Corporation. All rights reserved. Intel, the Intel logo, and other Intel marks are trademarks of Intel Corporation or its subsidiaries. Intel warrants performance of its FPGA and semiconductor products to current specifications in accordance with Intel's standard warranty, but reserves the right to make changes to any products and services at any time without notice. Intel assumes no responsibility or liability arising out of the application or use of any information, product, or service described herein except as expressly agreed to in writing by Intel. Intel customers are advised to obtain the latest version of device specifications before relying on any published information and before placing orders for products or services.
*Other names and brands may be claimed as the property of others.

ISO 9001:2015 Registered

2.2. Installing the Subscription Edition of the Quartus Prime Design Software

The Quartus® Prime Pro Edition software provides the necessary tools used for developing hardware and software for Altera devices.

Included in the Quartus Prime Pro Edition software are the Quartus Prime software, the Nios II EDS, and the MegaCore IP Library. To install the Altera development tools, download the Quartus Prime Pro Edition Software from the Quartus Prime Pro Edition page in the Download Center of the Altera website.

Related Information

Quartus Prime Software page

2.2.1. Activating Your License

Purchasing this kit entitles you to a one-year license for the Development Kit Edition (DKE) of the Quartus Prime software. After the year, your DKE license will no longer be valid and you will not be permitted to use this version of the Quartus Prime software. To continue using the Quartus Prime software, you should purchase a subscription to Quartus Prime Pro or Standard Edition.

Before using the Quartus Prime software, you must activate your license, identify specific users and computers, and obtain and install a license file. If you already have a licensed version of the subscription edition, you can use that license file with this kit. If not, follow these steps:

1. Log on at the myAltera Account Sign In web page, and click **Sign In**.
2. On the myAltera Home web page, click the Self-Service Licensing Center link.
3. Locate the serial number printed on the side of the development kit box below the bottom bar code. The number consists of alphanumeric characters and does not contain hyphens.
4. On the Self-Service Licensing Center web page, click the Find it with your License Activation Code link.
5. In the **Find/Activate Products** dialog box, enter your development kit serial number and click **Search**.
6. When your product appears, turn on the check box next to the product name.
7. Click **Activate Selected Products**, and click **Close**.
8. When licensing is complete, Altera emails a `license.dat` file to you. Store the file on your computer and use the License Setup page of the **Options** dialog box in the Quartus Prime software to enable the software.

Related Information

- Altera Software Installation and Licensing
- myAltera Account Sign In web page

2.3. Installing the Altera SoC Embedded Development Suite (EDS)

The Altera SoC EDS is a comprehensive tool suite for embedded software development on Altera SoC devices. It contains development tools, utility programs, run-time software, and application examples to expedite firmware and application software of SoC embedded systems.

As a part of the Altera SoC EDS, the ARM DS-5 Altera Edition Toolkit provides a comprehensive set of embedded development tools for Altera SoCs.

For more information, refer to the *ARM Development Studio 5 (DS-5) Altera Edition Toolkit*.

For the steps to install the SoC EDS Tool Suite, refer to the *Altera SoC Embedded Design Suite User Guide*.

Related Information

- ARM Development Studio 5 (DS-5) Altera Edition Toolkit
- Altera SoC Embedded Design Suite User Guide

2.4. Development Kit Installer

The development kit installer is an installable archive of supporting documentation. It does not include the software or documentation for the Quartus Prime design software, nor does it include the SoC EDS software development tools.

1. Download the Arria 10 FPGA Development Kit installer from the Arria 10 FPGA Development Kit page of the Altera website. Alternatively, you can request a development kit DVD from the Altera Kit Installations DVD Request Form page of the Altera website.
2. Run the Arria 10 FPGA Development Kit installer.
3. Follow the on-screen instructions to complete the installation process. Be sure that the installation directory you choose is in the same relative location to the Quartus Prime software installation.
   The installation program creates the development kit directory structure shown in the following figure.

Figure 3. Installed Development Kit Directory Structure

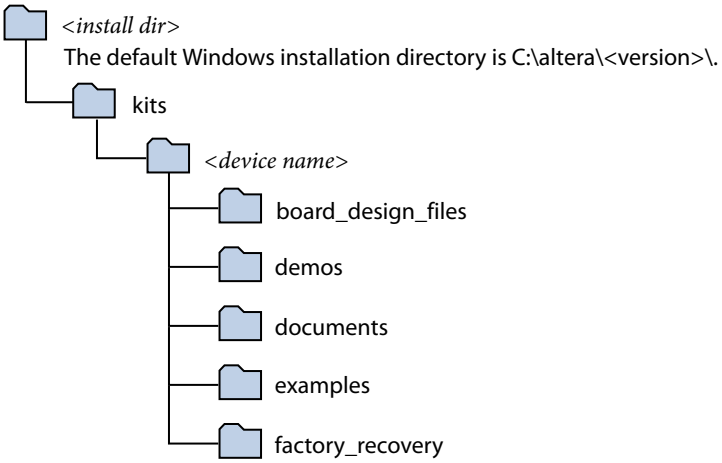

Table 2. Installed Directory Contents

Directory Name	Description of Contents
`board_design_files`	Contains schematic, layout, assembly, and bill of material board design files. Use these files as a starting point for a new prototype board design.
`demos`	Contains demonstration applications when available.
`documents`	Contains the documentation.
`examples`	Contains the sample design files for this kit.
`factory_recovery`	Contains the original data programmed onto the board before shipment. Use this data to restore the board with its original factory contents.

2.5. Installing the USB-Blaster Driver

The development board includes integrated USB-Blaster circuitry for FPGA programming. However, for the host computer and board to communicate, you must install the on-board USB-Blaster II driver on the host computer.

Installation instructions for the on-board USB-Blaster II driver for your operating system are available on the Altera website. On the Altera Programming Cable Driver Information page of the Altera website, locate the table entry for your configuration and click the link to access the instructions.

The on-board USB Blaster II circuit defaults to 24M and can be unstable depending on the bus loading or HSMC cards installed. It is recommended to change the speed down to 16M for better stability.

From a Nios® II Command Shell, type the following

```
jtagconfig
```

Note: returns the device lists of all the USB cables

```
jtagconfig --getparam <cable> Jtagclock
```

Note: returns current setting

```
jtagconfig --setparam <cable> JtagClock 16M
```

Note: sets to 16M (recommended)

Attention: <cable> is the index of the USB cables and it starts with 1.

Attention: This setting is non-volatile and may need to be done if you power down and unplug your board and then power it back up and plug it in again.

USB-Blaster II Supported Rates:

- 24 MHz
- 16 MHz
- 6 MHz
- 24/n MHz (between 10 KHz and 6 MHz, where n represents an integer value.)

Related Information

Altera Programming Cable Driver Information

2.6. SD Card Image with Example Software

The Arria 10 GSRD (Golden System Reference Design) page on Rocketboards.org has instructions to create an SD card image.

Related Information

GSRD User Manual

3. Development Board Setup

This section describes how to apply power to the board and provides default switch and jumper settings.

3.1. Applying Power to the Board

This development kit ships with its board switches preconfigured to support the design examples in the kit.

If you suspect that your board might not be currently configured with the default settings, follow the instructions in the Default Switch and Jumper Settings section of this chapter.

1. Power up the development board by using the included power supply.

   Caution: Use only the supplied power supply. Power regulation circuitry on the board can be damaged by power supplies with greater voltage, and a lower-rated power supply may not be able to provide enough power for the board.

2. When configuration is complete, the configuration done green LED (D18) illuminates, signaling that the Arria 10 SoC device is configured successfully.

Intel Corporation. All rights reserved. Intel, the Intel logo, and other Intel marks are trademarks of Intel Corporation or its subsidiaries. Intel warrants performance of its FPGA and semiconductor products to current specifications in accordance with Intel's standard warranty, but reserves the right to make changes to any products and services at any time without notice. Intel assumes no responsibility or liability arising out of the application or use of any information, product, or service described herein except as expressly agreed to in writing by Intel. Intel customers are advised to obtain the latest version of device specifications before relying on any published information and before placing orders for products or services.
*Other names and brands may be claimed as the property of others.

ISO 9001:2015 Registered

3.2. Default Switch and Jumper Settings

This topic shows you how to restore the default factory settings and explains their functions.

Caution: Do not install or remove jumpers (shunts) while the development board is powered on.

Figure 4. Default Switch and Jumper Settings

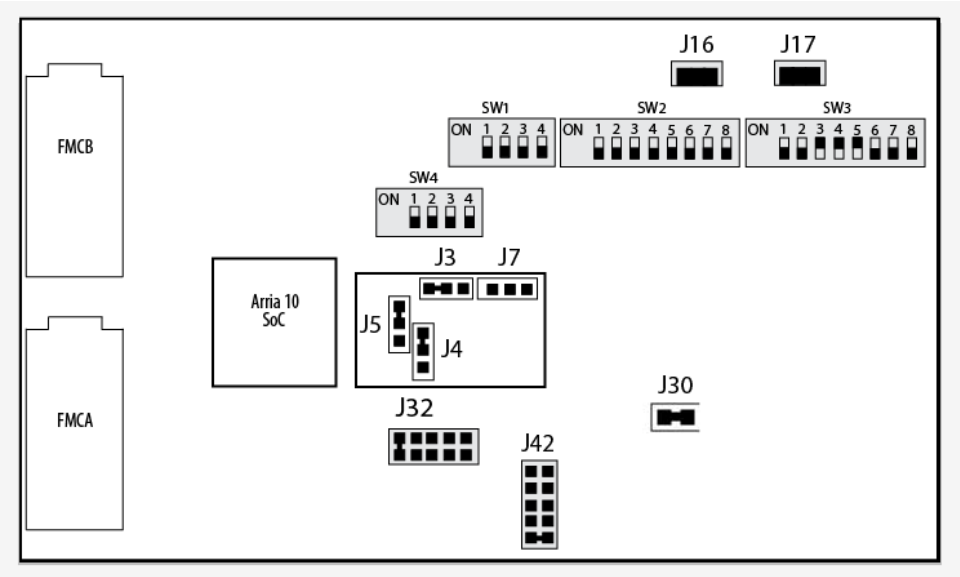

Note: The Switch position is represented by the black box.

To restore the switches to their factory default settings, perform these steps:

1. Set the DIP switch bank (SW1) to match "SW1 DIP Switch Settings" table and the "Default Switch and Jumper Settings" figure.

   Note: In the following table, *ON* indicates the switch is to the upper position according to the board orientation as shown in the "Default Switch and Jumper Settings" figure.

Table 3. SW1 Factory Default Settings

Switch	Bit Name	Bit Function	Default Position
1	I^2C flag	Switch 1.1 has the following options: • ON (0) = System MAX V is the I^2C master • OFF (1) = HPS is the I^2C master	OFF
2	DC_POWER_CTRL	Switch 1.2 has the following options: • ON (0) = Power off PCIE slot when it is present • OFF (1) = Power up PCIE directly	OFF
3	factory_load	Switch 1.3 has the following options: • ON (0) = Load user design from flash at power up • OFF (1) = Load factory design from flash at power up	OFF
4	security_mode	Resvered	OFF

Table 4. SW4 Switch Settings

Switch	Bit Name	Bit Function	Default Position
1	Reserved	Reserved	OFF
2	MSEL0	Switch 4.2 has the following options: • ON (Up) = MSEL0 is 1 • OFF (Down) = MSEL0 is 0	OFF
3	MSEL1	Switch 4.3 has the following options: • ON (Up) = MSEL1 is 1 • OFF (Down) = MSEL1 is 0	OFF
4	MSEL2	Switch 4.4 has the following options: • ON (Up) = MSEL2 is 1 • OFF (Down) = MSEL2 is 0	OFF

Table 5. MSEL Settings for each Configuration Scheme of Arria 10 SoC Devices

Configuration	V_{ccpgm} (V)	Power-On Reset (POR delay)	Valid MSEL [2:0]
JTAG-based configuration	-	-	Use any valid MSEL pin settings below
AS-Active Serial (x1 and x4)	1.8	Fast	010
		Standard	011
PS-Passive Serial	1.2/1.5/1.8	Fast	000
		Standard	001

2. Set the DIP switch bank (SW3) to match the following tables:

Table 6. SW3 Factory Default Settings

Switch	Board Label	Function	Default Position
1	Arria 10	ON- Arria 10 JTAG Bypass OFF- Arria 10 JTAG Enable	OFF
2	IO MAX V	ON- MAX V JTAG Bypass OFF- MAX V JTAG Enable	OFF
3	FMCA	ON- FMCA JTAG Bypass OFF- FMCA JTAG Enable	ON
4	FMCB	ON- FMCB JTAG Bypass OFF- FMCB JTAG Enable	ON
5	PCIe	ON- PCIe JTAG Bypass OFF- PCIe JTAG Enable	ON
6	MSTR0	On-Board USB Blaster II JTAG Master	OFF
7	MSTR1	On-Board USB Blaster II JTAG Master	OFF
8	MSTR2	On-Board USB Blaster II JTAG Master	OFF

3. Set the following jumper blocks to match the table below:

Table 7. Default Jumper Settings

Board Reference	Board Label	Description	Default Position
J16, J17	OSC2_CLK_SEL	• 00 (SHORT, SHORT): Selects the on-board 25MHz clock • 01 (SHORT, OPEN): Selects SMA clock which connected to J15 • 10 (OPEN, SHORT): Selects the on-board 33MHz clock • 11 (OPEN, OPEN): none	SHORT, SHORT
J30	HPS Core Voltage	• SHORT: HPS core 0.95 V • OPEN: HPS core 0.9 V	SHORT
J32	Voltage of FMCBVADJ	• No SHORT: 1.1 V • SHORT 1 and 2: 1.2 V • SHORT 3 and 4: 1.25 V • SHORT 5 and 6: 1.35 V • SHORT 7 and 8: 1.5 V • SHORT 9 and 10: 1.8 V	SHORT 9 and 10
J42	Voltage of FMCAVADJ	• No SHORT: 1.1 V • SHORT 1 and 2: 1.1 V • SHORT 3 and 4: 1.2 V • SHORT 5 and 6: 1.35 V • SHORT 7 and 8: 1.5 V • SHORT 9 and 10: 1.8 V	SHORT 9 and 10

Table 8. Default Jumper BSEL Settings for Micro-SD Daughtercard

Board Reference	Description	Default BSEL Value = 0x4	Default Position
J3	BSEL0	0	SHORT left 2 pins
J4	BSEL1	0	SHORT upper 2 pins(1)
J5	BSEL2	1	SHORT upper 2 pins(1)

(1) The directions of these pins are in reference to the board arrangement as in the "Default Switch and Jumper Settings" figure.

Related Information

Board Settings DIP Switch on page 64

4. Board Test System

This kit includes an application called the Board Test System (BTS). The BTS is an easy-to-use interface to alter functional settings of the FPGA portion of the SoC. You can use the BTS to test board components, modify functional parameters, observe performance, and measure power usage.

Figure 5. Board Test System GUI

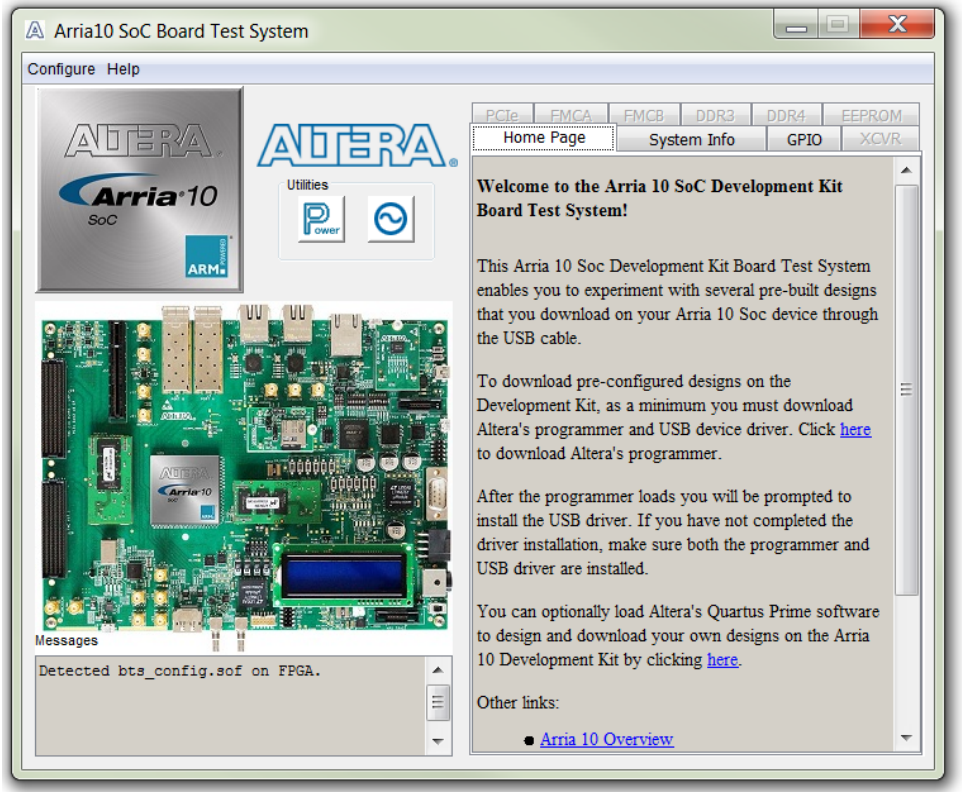

You can use the BTS to test board components, modify functional parameters, observe performance, and measure power usage. While using the BTS, you reconfigure the FPGA several times with test designs specific to the functionality you are testing.

Several designs are provided to test the major board features. Each design provides data for one or more tabs in the application. The Configure menu identifies the appropriate design to download to the FPGA for each tab.

After successful FPGA configuration, the appropriate tab appears that allows you to exercise the related board features. Highlights appear in the board picture around the corresponding components.

Intel Corporation. All rights reserved. Intel, the Intel logo, and other Intel marks are trademarks of Intel Corporation or its subsidiaries. Intel warrants performance of its FPGA and semiconductor products to current specifications in accordance with Intel's standard warranty, but reserves the right to make changes to any products and services at any time without notice. Intel assumes no responsibility or liability arising out of the application or use of any information, product, or service described herein except as expressly agreed to in writing by Intel. Intel customers are advised to obtain the latest version of device specifications before relying on any published information and before placing orders for products or services.
*Other names and brands may be claimed as the property of others.

ISO 9001:2015 Registered

The BTS communicates over the JTAG bus to a test design running in the FPGA. The Board Test System and Power Monitor share the JTAG bus with other applications like the Nios II debugger and the SignalTap® II Embedded Logic Analyzer.

Note: Because the BTS is designed based on the Quartus Prime Programmer and system console, be sure to close the other applications before you use the BTS application.

4.1. Preparing the Board

After successful FPGA configuration, with the power to the board off, follow these steps:

1. Connect the USB cable to your PC and the USB Blaster II port.
2. Change SW1 and SW3 to the following configuration:

Table 9. SW1 GUI Mode

Bit1	Bit2	Bit3	Bit4
ON	OFF	OFF	OFF

Table 10. SW3 GUI Mode

Bit1	Bit2	Bit3	Bit4	Bit5	Bit6	Bit7	Bit8
OFF	OFF	ON	ON	ON	OFF	ON	OFF

3. Turn on the power to the board, and run the Board Test System.

   Note: To ensure operating stability, keep the USB cable connected and the board powered on when running the demonstration application.

4.2. Running the Board Test System

To run the Board Test System (BTS), navigate to the `<Package Root Dir>\examples\board_test_system` directory and run the `BoardTestSystem.exe` application.

The BTS relies on the Quartus Prime software's specific library. Before running the BTS, set the environment variable `$QUARTUS_ROOTDIR` to the correct directory on your PC manually or open the Quartus Prime software to automatically set the environment variable. The Board Test System uses this environment variable to locate the Quartus Prime library.

Note: The version of Quartus Prime software set in the `$QUARTUS_ROOTDIR` environment variable should be version 15.1 or later.

4.3. Version Selector

The Board Test System (BTS) will prompt you with a Version Selector window once opened. You can also open the Version Selector window through the **Configure** tab by clicking **Select Silicon Version**. Select the silicon version of the Arria 10 device that is installed on your board.

Figure 6. Configure Tab Version Selector Option

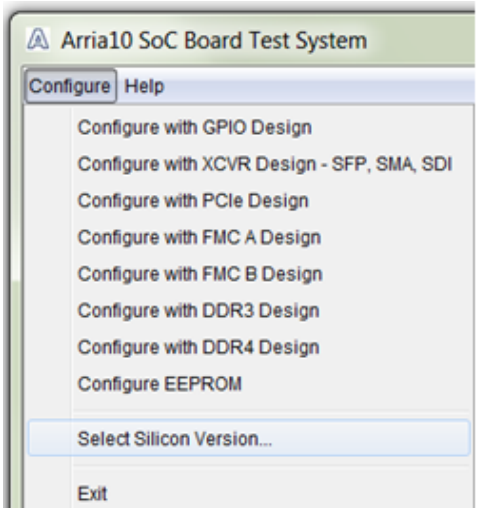

Figure 7. Version Selector

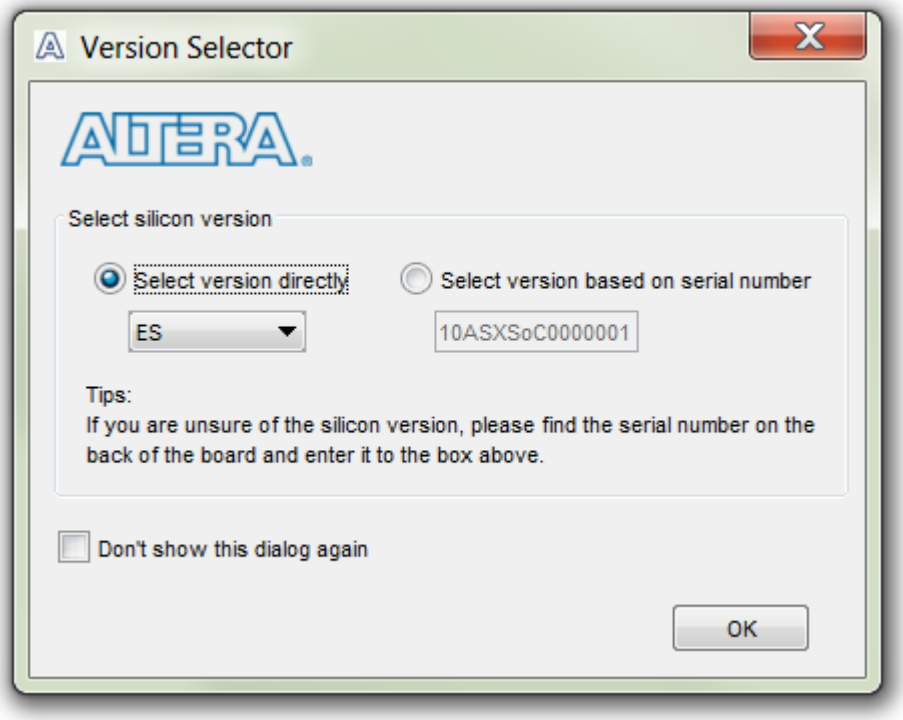

If you do not know, or unsure of the version, enter the board serial number in the box on the right and the software will pick the right version based on the table below. The numbers here are the last 3-4 digits of the serial number which can be found on the bottom of your board.

Figure 8. Board Serial Number Sticker

Table 11.

Serial Number	Arria 10 SoC Silicon Revision
10ASXSoC00[<0500]	ES
10ASXSoC00[0500-1999]	ES2
10ASXSoC00[>1999]	PRD

4.4. Using the Board Test System

This section describes each control in the Board Test System application.

4.4.1. Using the Configure Menu

Use the Configure menu to select the design you want to use. Each design example tests different board features. Choose a design from this menu and the corresponding tabs become active for testing.

Figure 9. The Configure Menu

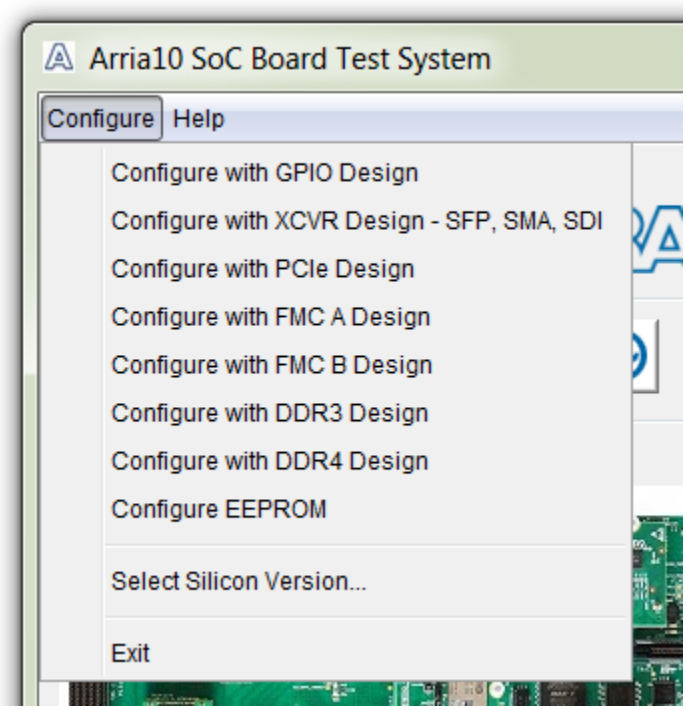

To configure the FPGA with a test system design, perform the following steps:

1. On the **Configure** menu, click the configure command that corresponds to the functionality you wish to test.
2. In the dialog box that appears, click **Configure** to download the corresponding design to the FPGA.

Figure 10. Programmer Dialog Window

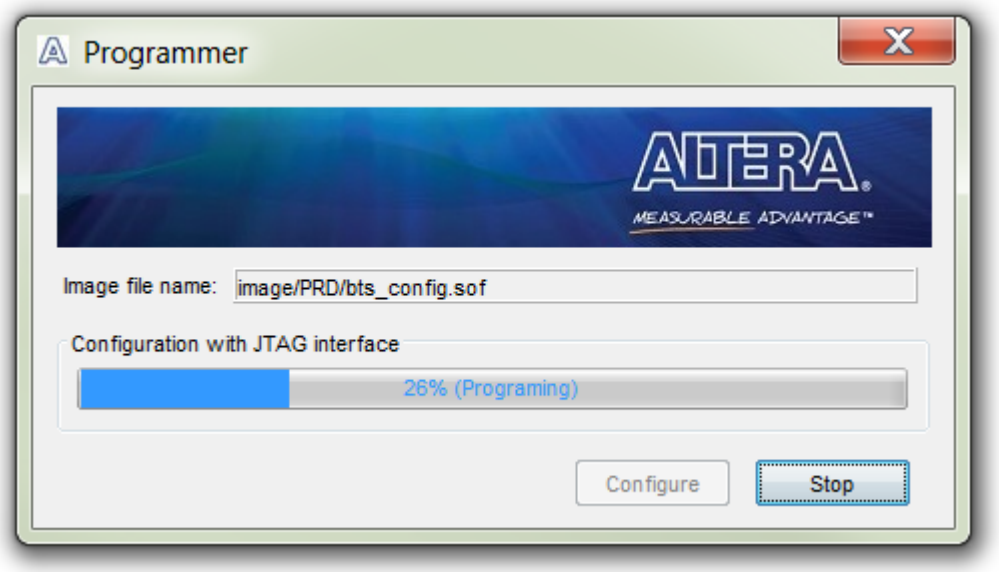

4.4.2. The System Info Tab

The System Info tab shows the board's current configuration. The tab displays the JTAG chain, the EEPROM Map, and other details stored on the board.

Figure 11. The System Info Tab

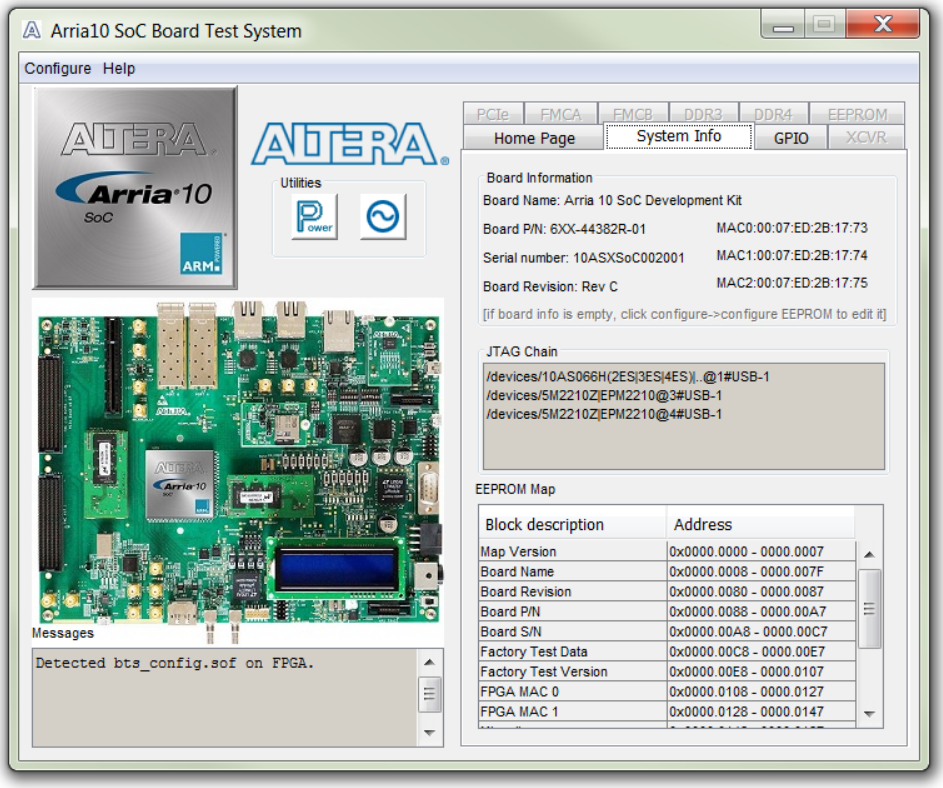

Table 12. Controls on the System Info Tab

Controls	Description
Board Information	The board information displays the default static information about your board.
Board Name	Indicates the official name of the board, given by the Board Test System.
Board P/N	Indicates the part number of the board.
Board Revision	Indicates the version of the board.
MAC0	Indicates the MAC address of he first ETH port of the FPGA
MAC1	Indicates the MAC address of the second ETH port of the FPGA
MAC2	Indicates the MAC address of the ETH port of the HPS
JTAG Chain	Shows all the devices currently in the JTAG chain.
EEPROM Map	Shows the EEPROM map on your board.

4.4.3. The GPIO Tab

The GPIO tab allows you to interact with all the general purpose user I/O components on your board. You can read DIP switch settings, turn LEDs on or off, and detect push button presses.

Figure 12. The GPIO Tab

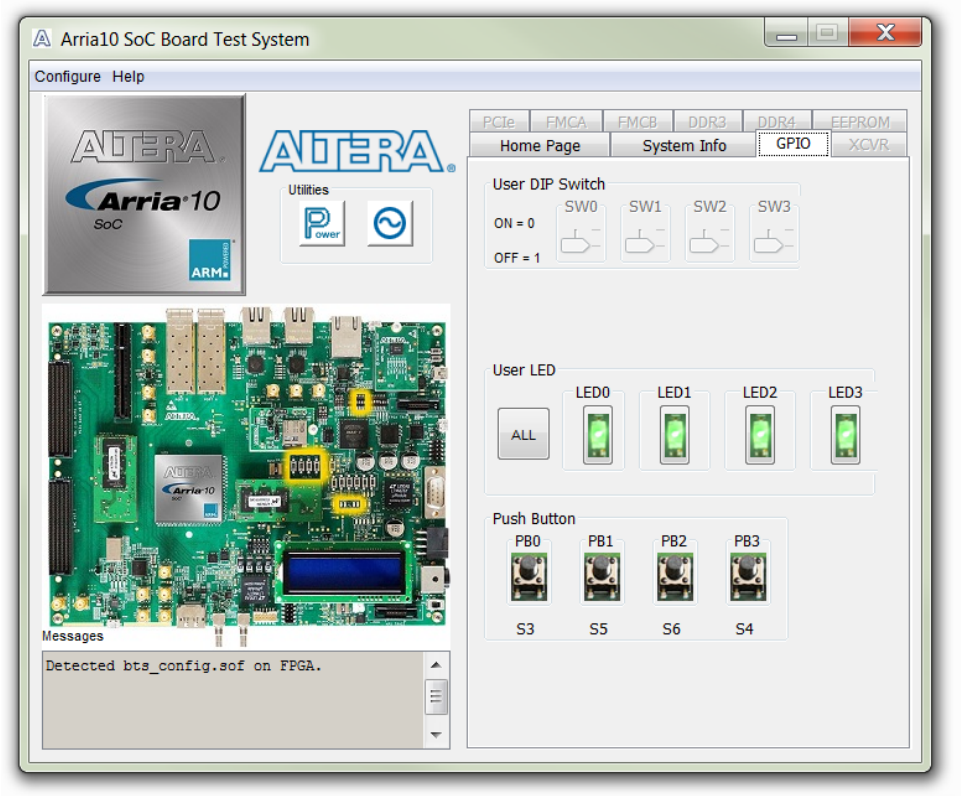

Table 13. Controls on the GPIO Tab

User DIP Switch	Displays the current positions of the switches in the user DIP switch bank (SW2). Change the switches on the board to see the graphical display change accordingly.
User LEDs	Displays the current state of the user LEDs for the FPGA. To toggle the board LEDs, click one of the LED [**0** to **3**] buttons to toggle the 4 green LEDs, or click the **All** button.
Push Button Switches	Read-only control displays the current state of the board user push buttons. Press a push button on the board to see the graphical display change accordingly.

4.4.4. The XCVR Tab

This tab allows you to perform loopback tests on the QSFP, SFP, SMA, and SDI ports.

Figure 13. The XCVR Tab

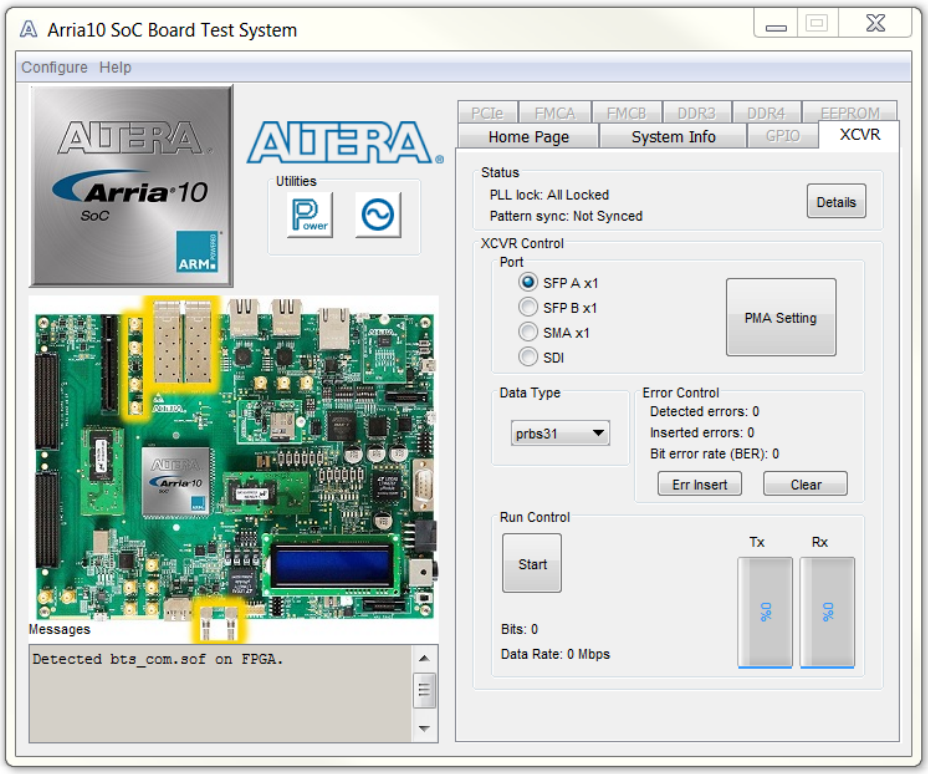

Control	Description
Status	Displays the following status information during a loopback test: PLL lock—Shows the PLL locked or unlocked state. Pattern sync—Shows the pattern synced or not synced state. The pattern is considered synced when the start of the data sequence is detected. Details—Shows the PLL lock and pattern sync status, and detected errors of each channels.: 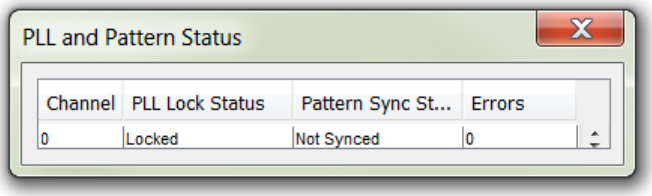
Port	Allows you to specify which interface to test. The following port tests are available: SFP A x1 SFP B x1 SMA x1 SDI

continued...

Control	Description
PMA Setting	Allows you to make changes to the PMA parameters that affect the active transceiver interface. The following settings are available for analysis: Serial Loopback—Routes signals between the transmitter and the receiver. VOD—Specifies the voltage output differential of the transmitter buffer. Pre-emphasis tap • 1st pre—Specifies the amount of pre-emphasis on the pre-tap of the transmitter buffer. • 2nd pre—Specifies the amount of pre-emphasis on the second pre-tap of the transmitter buffer. • 1st post—Specifies the amount of pre-emphasis on the first post tap of the transmitter buffer. • 2nd post—Specifies the amount of pre-emphasis on the second post tap of the transmitter buffer. Equalizer—Specifies the AC gain setting for the receiver equalizer in four stage mode. DC gain—Specifies the DC gain setting for the receiver equalizer in four stage mode. VGA—Specifies the VGA gain value. 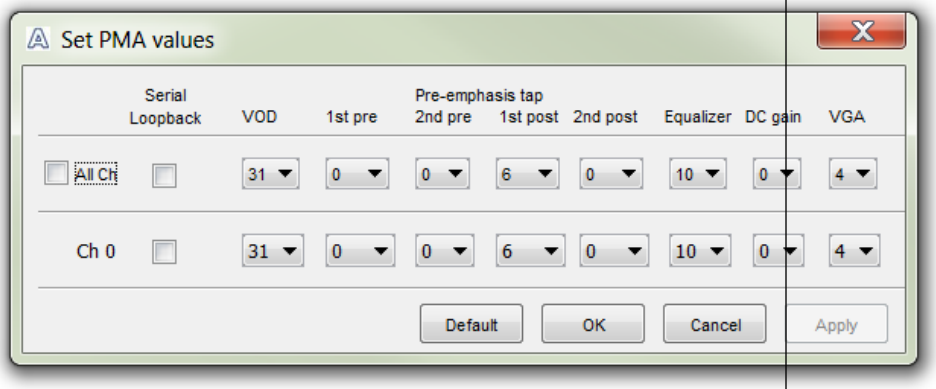
Data Type	Specifies the type of data contained in the transactions. The following data types are available for analysis: • PRBS 7—Selects pseudo-random 7-bit sequences. • PRBS 15—Selects pseudo-random 15-bit sequences. • PRBS 23—Selects pseudo-random 23-bit sequences. • PRBS 31—Selects pseudo-random 31-bit sequences. • HF—Selects highest frequency divide-by-2 data pattern 10101010. • LF—Selects lowest frequency divide-by-33 data pattern.
Error Control	Displays data errors detected during analysis and allows you to insert errors: • Detected errors—Displays the number of data errors detected in the hardware. • Inserted errors—Displays the number of errors inserted into the transmit data stream. • Insert Error—Inserts a one-word error into the transmit data stream each time you click the button. Insert Error is only enabled during transaction performance analysis. • Clear—Resets the Detected errors and Inserted errors counters to zeroes.
Run Control	Start—Initiates the selected ports transaction performance analysis. *Note:* Always click **Clear** before **Start**. Stop—Terminates transaction performance analysis. TX and RX performance bars—Show the percentage of maximum theoretical data rate that the requested transactions are able to achieve.

4.4.5. The PCIe Tab

This tab allows you to run a PCIe loopback test on your board. You can also load the design and use an oscilloscope to measure an eye diagram of the PCIe transmit signals.

Figure 14. The PCIe Tab

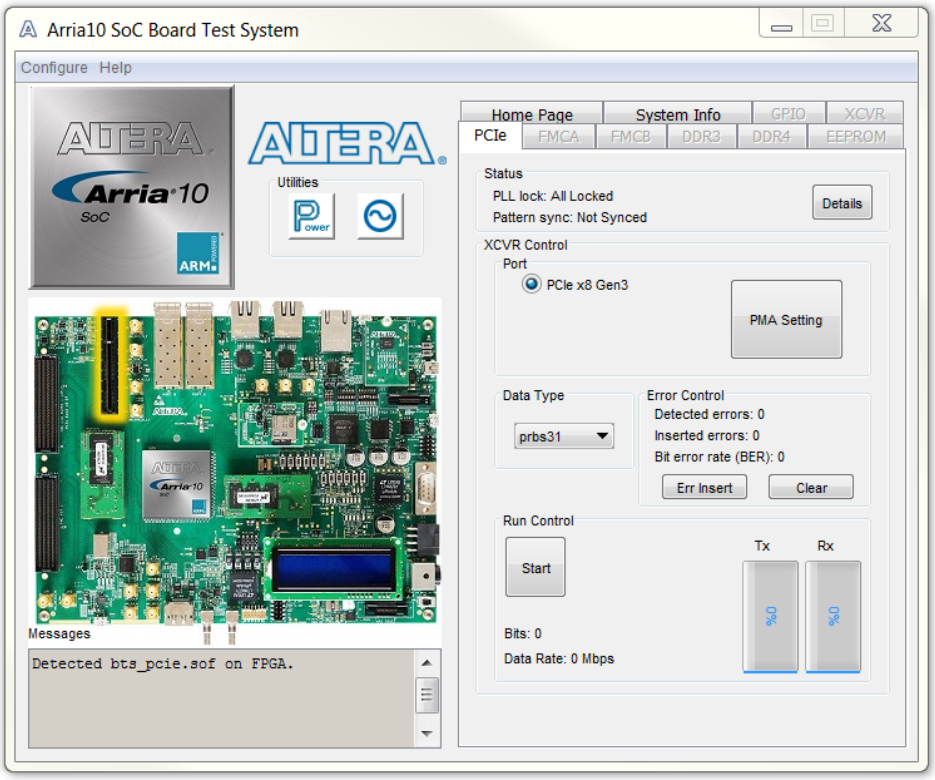

Control	Description
Status	Displays the following status information during a loopback test: PLL lock—Shows the PLL locked or unlocked state. Pattern sync—Shows the pattern synced or not synced state. The pattern is considered synced when the start of the data sequence is detected.

continued...

Control	Description
	Details—Shows the PLL lock and pattern sync status: 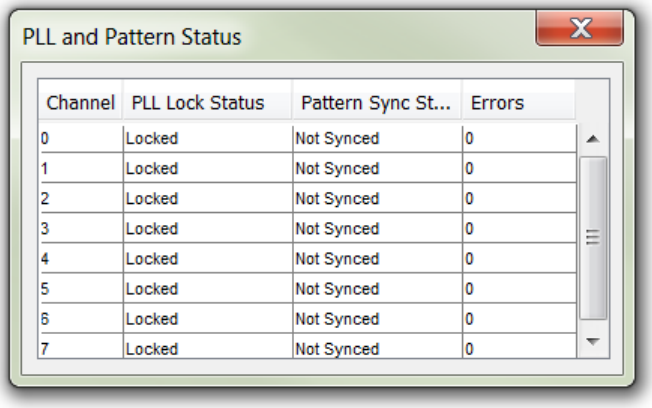
Port	PCIe x8 Gen3
PMA Setting	Allows you to make changes to the PMA parameters that affect the active transceiver interface. The following settings are available for analysis: Serial Loopback—Routes signals between the transmitter and the receiver. VOD—Specifies the voltage output differential of the transmitter buffer. Pre-emphasis tap • 1st pre—Specifies the amount of pre-emphasis on the pre-tap of the transmitter buffer. • 2nd pre—Specifies the amount of pre-emphasis on the second pre-tap of the transmitter buffer. • 1st post—Specifies the amount of pre-emphasis on the first post tap of the transmitter buffer. • 2nd post—Specifies the amount of pre-emphasis on the second post tap of the transmitter buffer. Equalizer—Specifies the AC gain setting for the receiver equalizer in four stage mode. DC gain—Specifies the DC gain setting for the receiver equalizer in four stage mode. VGA—Specifies the VGA gain value.

continued...

Control	Description
	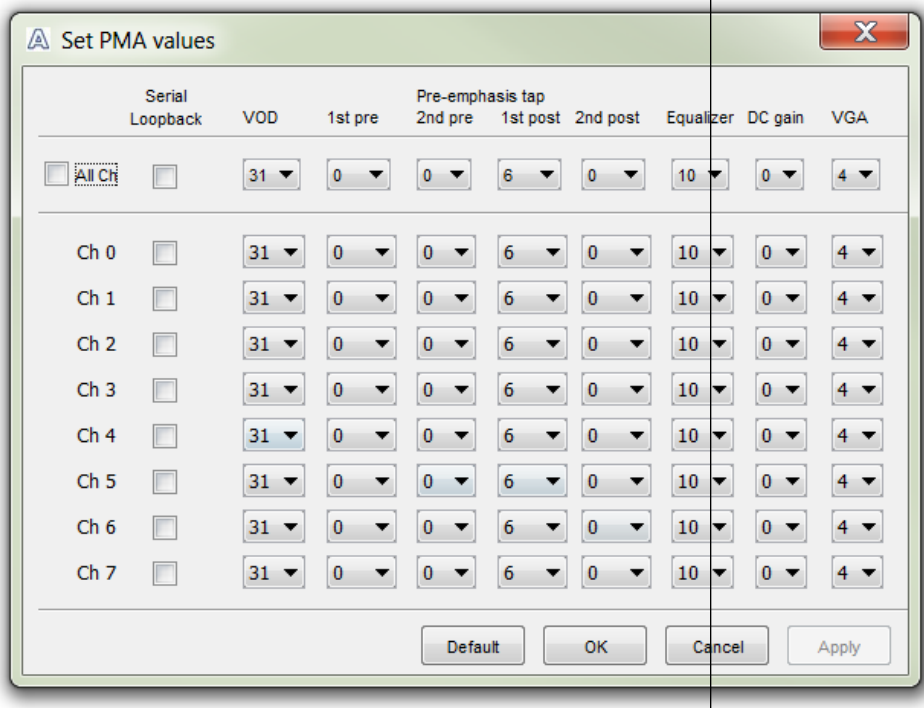
Data Type	Specifies the type of data contained in the transactions. The following data types are available for analysis: • PRBS 7—Selects pseudo-random 7-bit sequences. • PRBS 15—Selects pseudo-random 15-bit sequences. • PRBS 23—Selects pseudo-random 23-bit sequences. • PRBS 31—Selects pseudo-random 31-bit sequences. • HF—Selects highest frequency divide-by-2 data pattern 10101010. • LF—Selects lowest frequency divide-by-33 data pattern.
Error Control	Displays data errors detected during analysis and allows you to insert errors: • Detected errors—Displays the number of data errors detected in the hardware. • Inserted errors—Displays the number of errors inserted into the transmit data stream. • Insert Error—Inserts a one-word error into the transmit data stream each time you click the button. Insert Error is only enabled during transaction performance analysis. • Clear—Resets the Detected errors and Inserted errors counters to zeroes.
Run Control	Start—Initiates the selected ports transaction performance analysis. *Note:* Always click **Clear** before **Start**. Stop—Terminates transaction performance analysis. TX and RX performance bars—Show the percentage of maximum theoretical data rate that the requested transactions are able to achieve.

4.4.6. The FMCA Tab

This tab allows you to perform loopback tests on the FMC A port.

Figure 15. The FMC A Tab

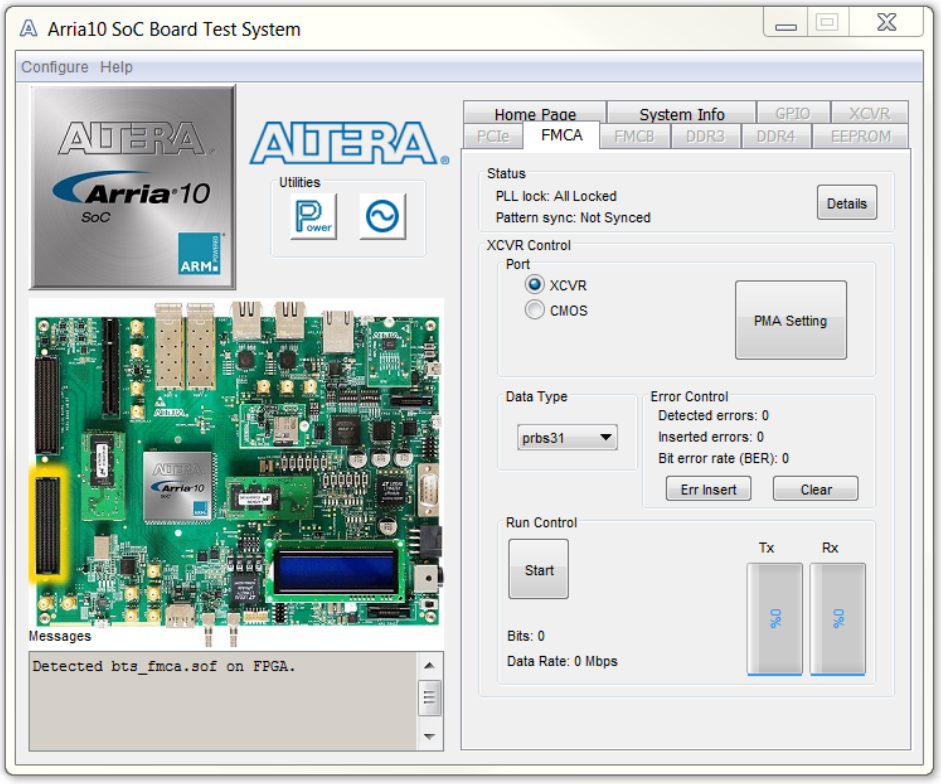

Control	Description
Status	Displays the following status information during a loopback test: PLL lock—Shows the PLL locked or unlocked state. Pattern sync—Shows the pattern synced or not synced state. The pattern is considered synced when the start of the data sequence is detected.

continued...

Control	Description
	Details—Shows the PLL lock and pattern sync status: 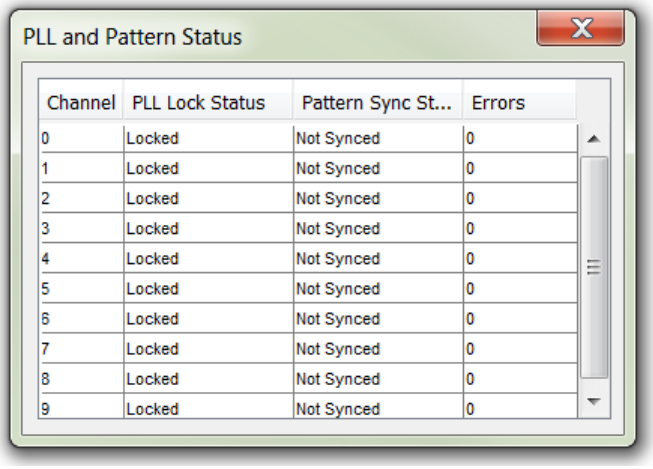 Channel / PLL Lock Status / Pattern Sync St... / Errors 0 / Locked / Not Synced / 0 1 / Locked / Not Synced / 0 2 / Locked / Not Synced / 0 3 / Locked / Not Synced / 0 4 / Locked / Not Synced / 0 5 / Locked / Not Synced / 0 6 / Locked / Not Synced / 0 7 / Locked / Not Synced / 0 8 / Locked / Not Synced / 0 9 / Locked / Not Synced / 0
Port	Allows you to specify which interface to test. The following port tests are available: XCVR CMOS
PMA Setting	Allows you to make changes to the PMA parameters that affect the active transceiver interface. The following settings are available for analysis: Serial Loopback—Routes signals between the transmitter and the receiver. VOD—Specifies the voltage output differential of the transmitter buffer. Pre-emphasis tap • 1st pre—Specifies the amount of pre-emphasis on the pre-tap of the transmitter buffer. • 2nd pre—Specifies the amount of pre-emphasis on the second pre-tap of the transmitter buffer. • 1st post—Specifies the amount of pre-emphasis on the first post tap of the transmitter buffer. • 2nd post—Specifies the amount of pre-emphasis on the second post tap of the transmitter buffer. Equalizer—Specifies the AC gain setting for the receiver equalizer in four stage mode. DC gain—Specifies the DC gain setting for the receiver equalizer in four stage mode. VGA—Specifies the VGA gain value.

continued...

Control	Description
	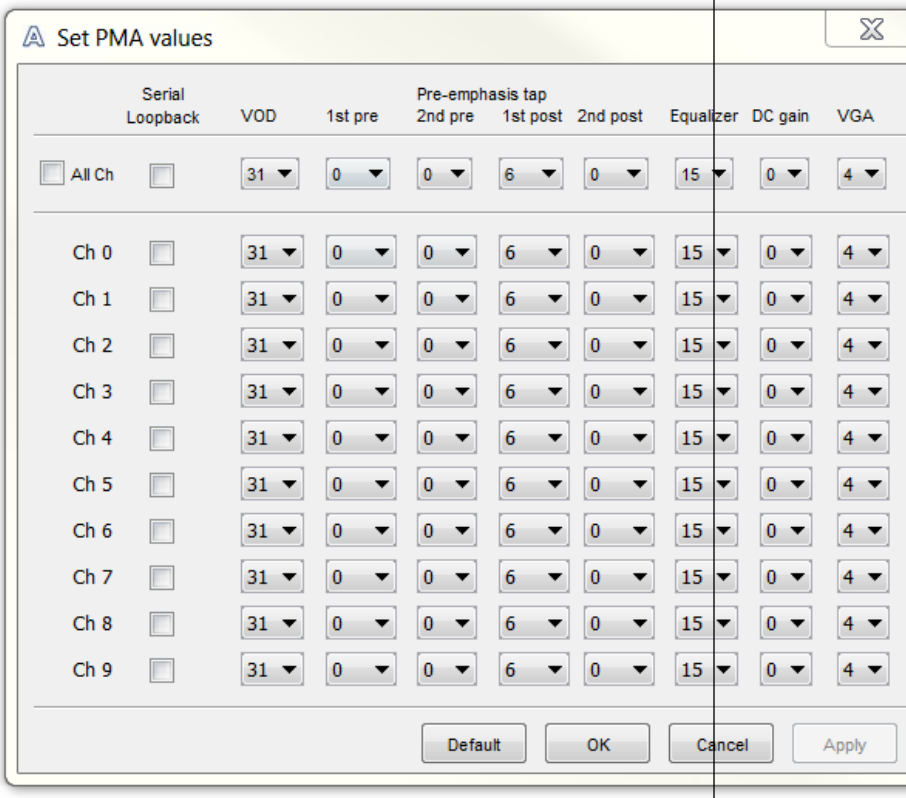
Data Type	Specifies the type of data contained in the transactions. The following data types are available for analysis: • PRBS 7—Selects pseudo-random 7-bit sequences. • PRBS 15—Selects pseudo-random 15-bit sequences. • PRBS 23—Selects pseudo-random 23-bit sequences. • PRBS 31—Selects pseudo-random 31-bit sequences. • HF—Selects highest frequency divide-by-2 data pattern 10101010. • LF—Selects lowest frequency divide-by-33 data pattern.
Error Control	Displays data errors detected during analysis and allows you to insert errors: • Detected errors—Displays the number of data errors detected in the hardware. • Inserted errors—Displays the number of errors inserted into the transmit data stream. • Insert Error—Inserts a one-word error into the transmit data stream each time you click the button. Insert Error is only enabled during transaction performance analysis. • Clear—Resets the Detected errors and Inserted errors counters to zeroes.
Run Control	Start—Initiates the selected ports transaction performance analysis. *Note:* Always click **Clear** before **Start**. Stop—Terminates transaction performance analysis. TX and RX performance bars—Show the percentage of maximum theoretical data rate that the requested transactions are able to achieve.

4.4.7. The FMCB Tab

This tab allows you to perform loopback tests on the FMC B port.

Figure 16. The FMC B Tab

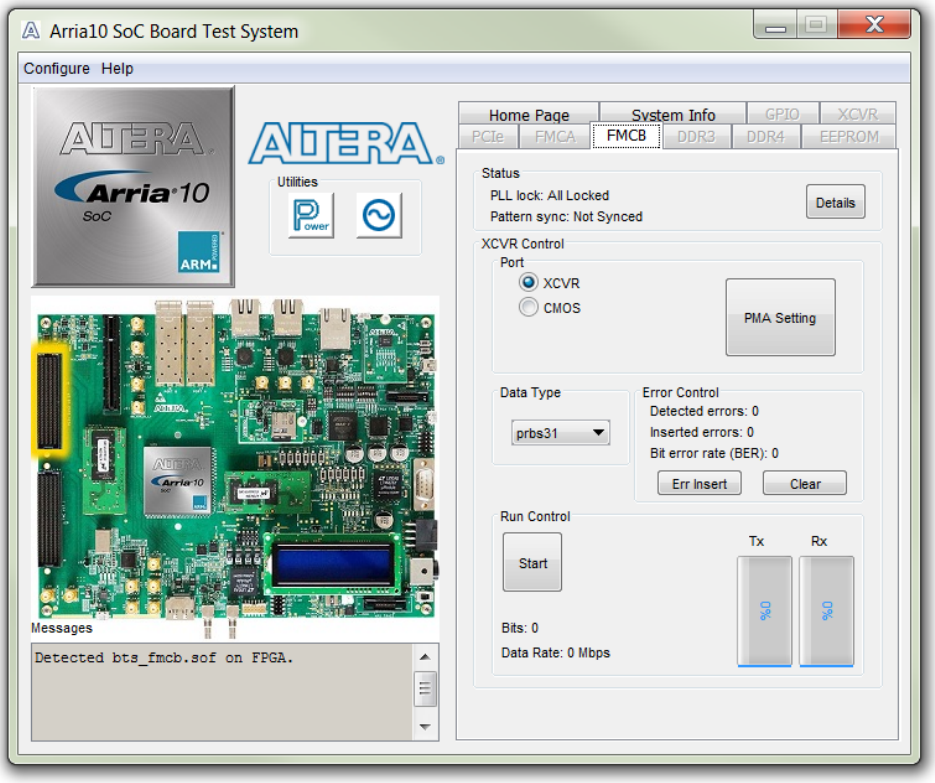

Control	Description
Status	Displays the following status information during a loopback test: PLL lock—Shows the PLL locked or unlocked state. Pattern sync—Shows the pattern synced or not synced state. The pattern is considered synced when the start of the data sequence is detected.

continued...

Control	Description
	Details—Shows the PLL lock and pattern sync status: 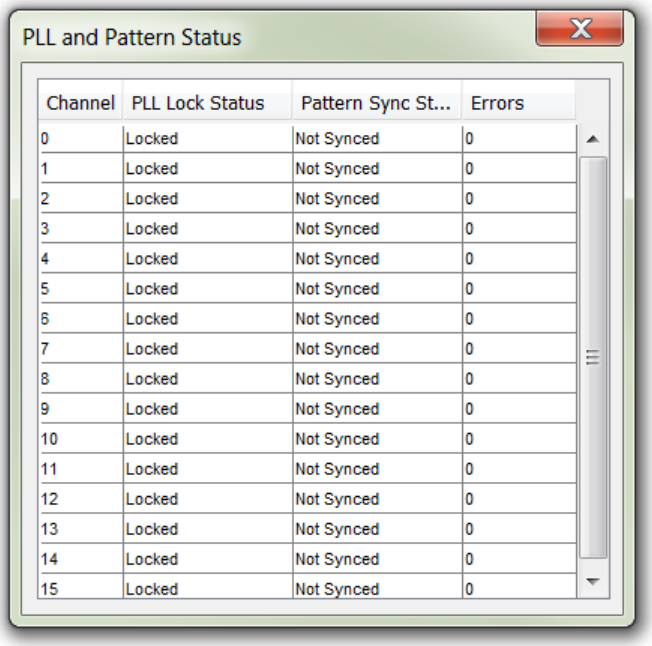 PLL and Pattern Status Channel | PLL Lock Status | Pattern Sync St... | Errors 0 | Locked | Not Synced | 0 1 | Locked | Not Synced | 0 2 | Locked | Not Synced | 0 3 | Locked | Not Synced | 0 4 | Locked | Not Synced | 0 5 | Locked | Not Synced | 0 6 | Locked | Not Synced | 0 7 | Locked | Not Synced | 0 8 | Locked | Not Synced | 0 9 | Locked | Not Synced | 0 10 | Locked | Not Synced | 0 11 | Locked | Not Synced | 0 12 | Locked | Not Synced | 0 13 | Locked | Not Synced | 0 14 | Locked | Not Synced | 0 15 | Locked | Not Synced | 0
Port	Allows you to specify which interface to test. The following port tests are available: XCVR CMOS
PMA Setting	Allows you to make changes to the PMA parameters that affect the active transceiver interface. The following settings are available for analysis: Serial Loopback—Routes signals between the transmitter and the receiver. VOD—Specifies the voltage output differential of the transmitter buffer. Pre-emphasis tap • 1st pre—Specifies the amount of pre-emphasis on the pre-tap of the transmitter buffer. • 2nd pre—Specifies the amount of pre-emphasis on the second pre-tap of the transmitter buffer. • 1st post—Specifies the amount of pre-emphasis on the first post tap of the transmitter buffer. • 2nd post—Specifies the amount of pre-emphasis on the second post tap of the transmitter buffer. Equalizer—Specifies the AC gain setting for the receiver equalizer in four stage mode. DC gain—Specifies the DC gain setting for the receiver equalizer in four stage mode. VGA—Specifies the VGA gain value.

continued...

Control	Description
	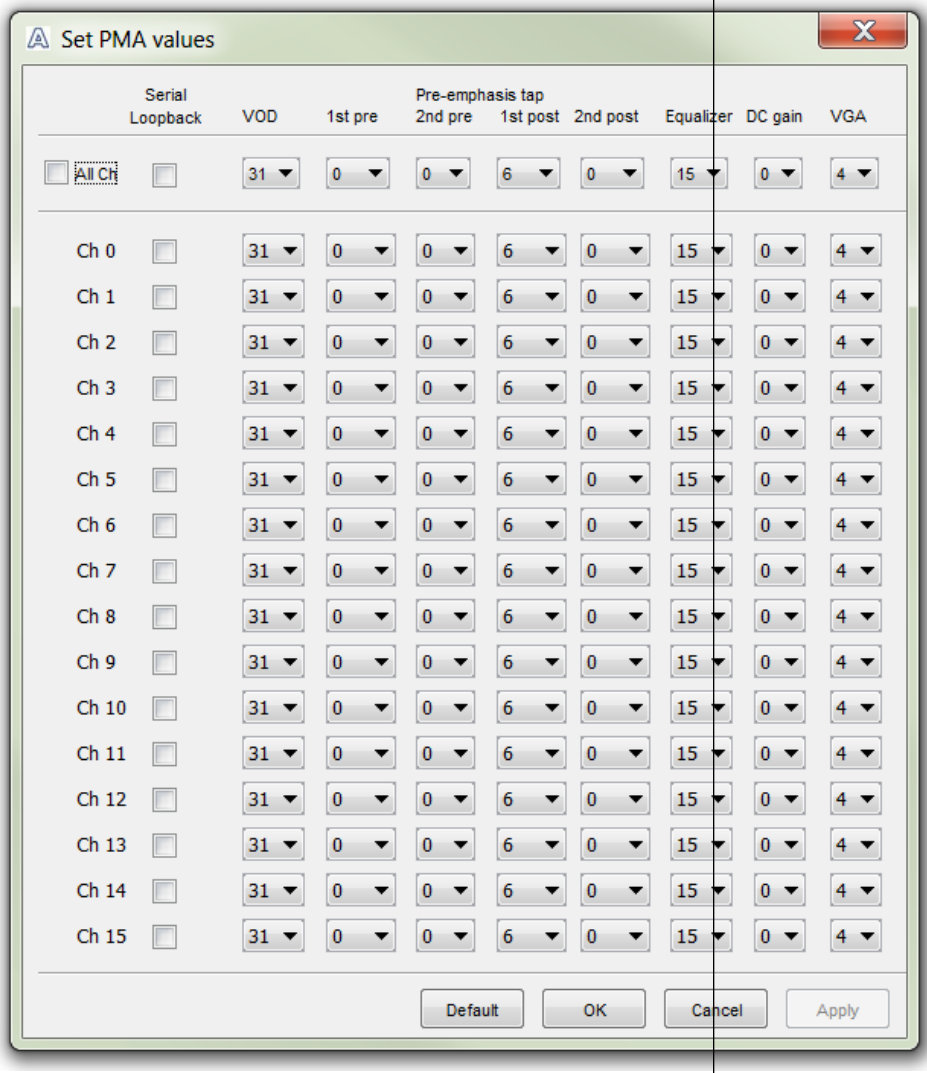
Data Type	Specifies the type of data contained in the transactions. The following data types are available for analysis: • PRBS 7—Selects pseudo-random 7-bit sequences. • PRBS 15—Selects pseudo-random 15-bit sequences. • PRBS 23—Selects pseudo-random 23-bit sequences. • PRBS 31—Selects pseudo-random 31-bit sequences. • HF—Selects highest frequency divide-by-2 data pattern 10101010. • LF—Selects lowest frequency divide-by-33 data pattern.
Error Control	Displays data errors detected during analysis and allows you to insert errors:

continued...

Control	Description
	• Detected errors—Displays the number of data errors detected in the hardware. • Inserted errors—Displays the number of errors inserted into the transmit data stream. • Insert Error—Inserts a one-word error into the transmit data stream each time you click the button. Insert Error is only enabled during transaction performance analysis. • Clear—Resets the Detected errors and Inserted errors counters to zeroes.
Run Control	Start—Initiates the selected ports transaction performance analysis. *Note:* Always click **Clear** before **Start**. Stop—Terminates transaction performance analysis. TX and RX performance bars—Show the percentage of maximum theoretical data rate that the requested transactions are able to achieve.

4.4.8. The DDR3 Tab

This tab allows you to read and write DDR3 memory on your board.

Figure 17. The DDR3 Tab

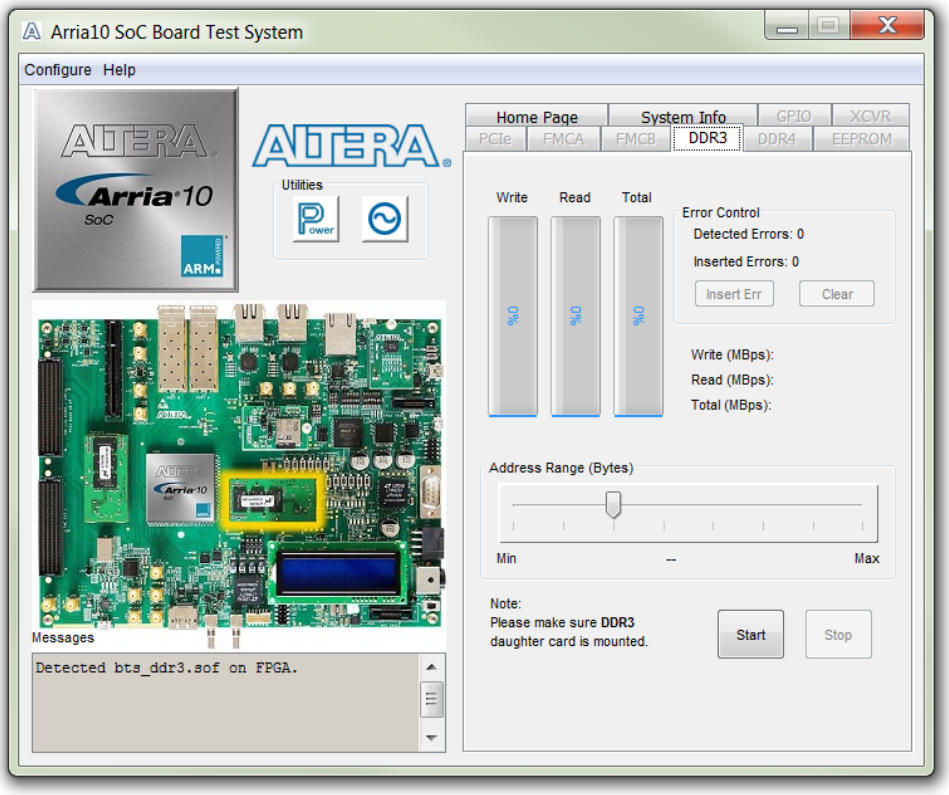

Control	Description
Performance Indicators	These controls display current transaction performance analysis information collected since you last clicked **Start**: • **Write**, **Read**, and **Total** performance bars—Show the percentage of maximum theoretical data rate that the requested transactions are able to achieve. • **Write (MBps)**, **Read (MBps)**, and **Total (MBps)**—Show the number of bytes of data analyzed per second. • Data bus: 72 bits (8 bits ECC) wide and the frequency is 1066 MHz double data rate. 2133 Megabits per second (Mbps) per pin. Equating to a theoretical maximum bandwidth of 136512 Mbps or 17064 MBps.
Error Control	This control displays data errors detected during analysis and allows you to insert errors:

continued...

Control	Description
	• **Detected errors**—Displays the number of data errors detected in the hardware. • **Inserted errors**—Displays the number of errors inserted into the transaction stream. • **Insert Error**—Inserts a one-word error into the transaction stream each time you click the button. Insert Error is only enabled during transaction performance analysis. • **Clear**—Resets the Detected errors and Inserted errors counters to zeroes.
Number of Addresses to Write and Read	Determines the number of addresses to use in each iteration of reads and writes.

4.4.9. The DDR4 Tab

This tab allows you to read and write DDR4 memory on your board.

Figure 18. The DDR4 Tab

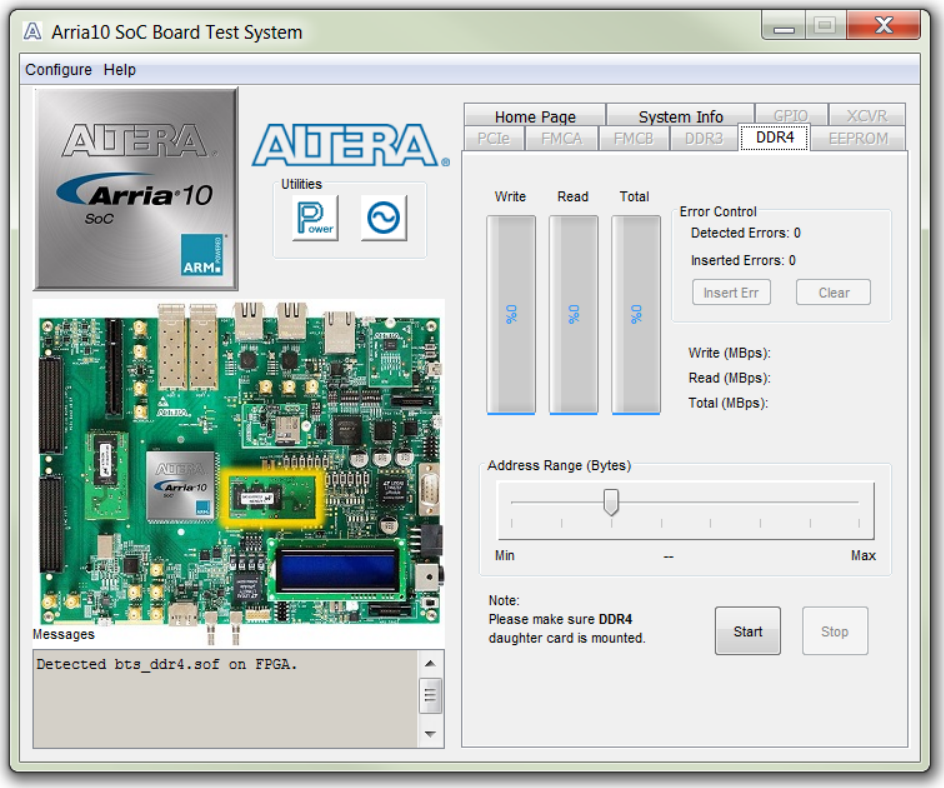

Control	Description
Start	Initiates DDR4 memory transaction performance analysis.
Stop	Terminates transaction performance analysis.
Performance Indicators	These controls display current transaction performance analysis information collected since you last clicked **Start**: • **Write**, **Read**, and **Total** performance bars—Show the percentage of maximum theoretical data rate that the requested transactions are able to achieve. • **Write (MBps)**, **Read (MBps)**, and **Total (MBps)**—Show the number of bytes of data analyzed per second. • Data bus: 72 bits (8 bits ECC) wide and the frequency is 1066 MHz double data rate. 2133 Megabits per second (Mbps) per pin. Equating to a theoretical maximum bandwidth of 136512 Mbps or 17064 MBps.
Error Control	This control displays data errors detected during analysis and allows you to insert errors:

continued...

Control	Description
	• **Detected errors**—Displays the number of data errors detected in the hardware. • **Inserted errors**—Displays the number of errors inserted into the transaction stream. • **Insert Error**—Inserts a one-word error into the transaction stream each time you click the button. Insert Error is only enabled during transaction performance analysis. • **Clear**—Resets the Detected errors and Inserted errors counters to zeroes.
Number of Addresses to Write and Read	Determines the number of addresses to use in each iteration of reads and writes.

4.4.10. The EEPROM Tab

This tab allows you to read EEPROM and set Board information to EEPROM.

Figure 19. The EEPROM Tab

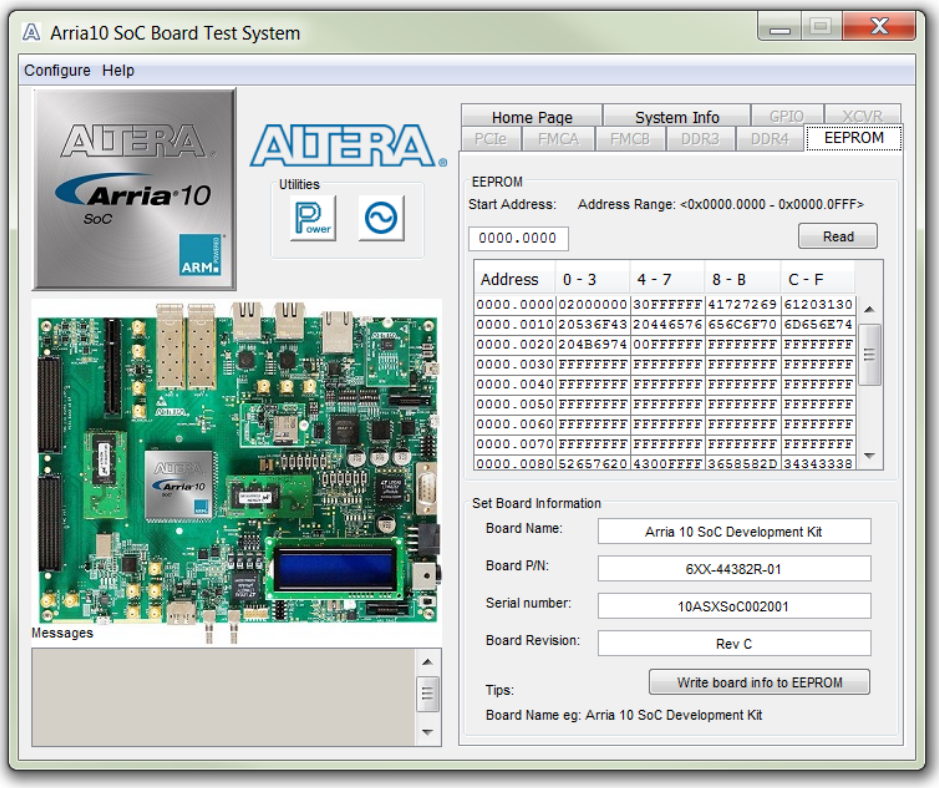

Table 14. The EEPROM Tab

Control	Description
Read	Reads data from EEPROM
Write board info to EEPROM	Writes board information (board name, board P/N, Serial Number, Board Revision) into EEPROM

4.4.11. The Power Monitor

The Power Monitor measures and reports current power information and communicates with the MAX V device on the board through the JTAG bus. A power monitor circuit attached to the MAX V device allows you to measure the power that the FPGA is consuming.

To start the application, click the Power Monitor icon in the Board Test System application. You can also run the Power Monitor as a stand-alone application. The `PowerMonitor.exe` resides in the `<Package Root Dir>\examples\board_test_system` directory.

Note: You cannot run the stand-alone power application and the BTS application at the same time. Also, you cannot run power and clock interface at the same time.

Figure 20. Power Monitor Interface

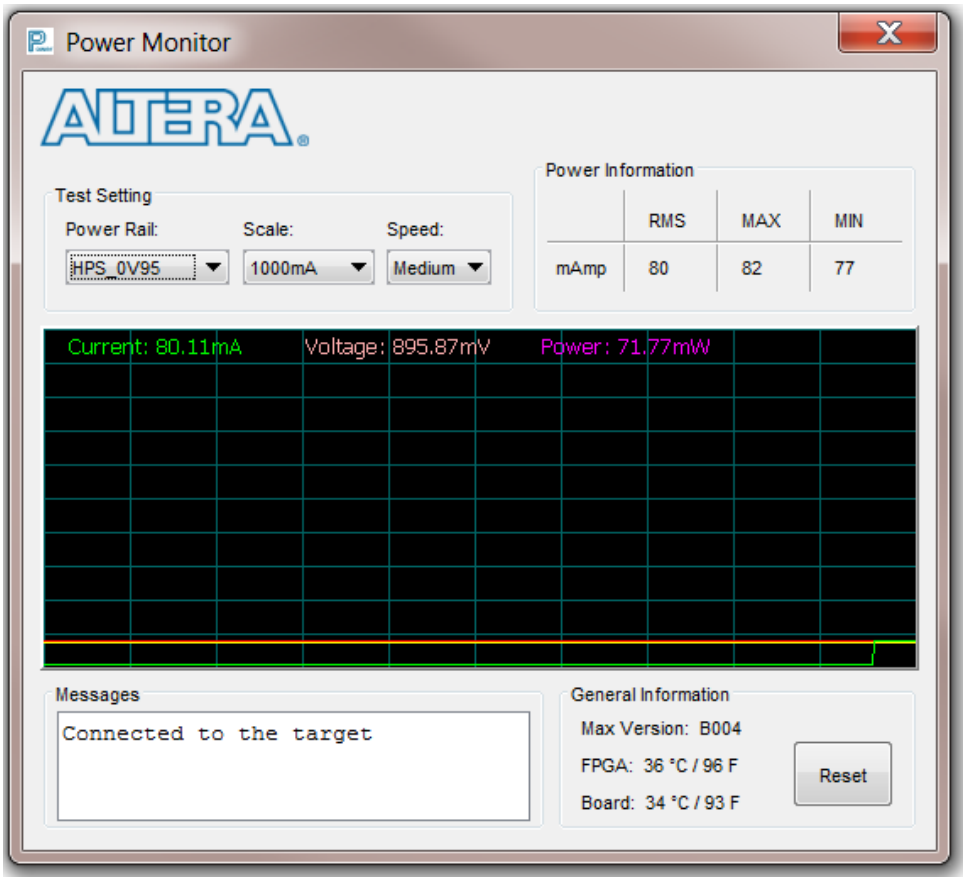

Control	Description
Test Settings	Displays the following controls: **Power Rail**—Indicates the currently-selected power rail. After selecting the desired rail, click **Reset** to refresh the screen with updated board readings.

continued...

Control	Description
	Scale—Specifies the amount to scale the power graph. Select a smaller number to zoom in to see finer detail. Select a larger number to zoom out to see the entire range of recorded values. **Speed**—Specifies how often to refresh the graph.
Power Information	Displays root-mean-square (RMS) current, maximum, and minimum numerical power readings in mA.
Graph	Displays the mA power consumption of your board over time. The green line indicates the current value. The red line indicates the maximum value read since the last reset. The yellow line indicates the minimum value read since the last reset.
General Information	Displays MAX V version and current temperature of the FPGA and board.
Reset	Clears the graph, resets the minimum and maximum values, and restarts the Power Monitor.

4.4.12. The Clock Control

The Clock Control application sets the three programmable oscillators to any frequency between 10 MHz and 810 MHz. The frequencies support eight digits of precision to the right of the decimal point.

The Clock Control communicates with the MAX V device on the board through the JTAG bus. The programmable oscillators are connected to the MAX V device through a 2-wire serial bus.

Figure 21. Clock Controller Window

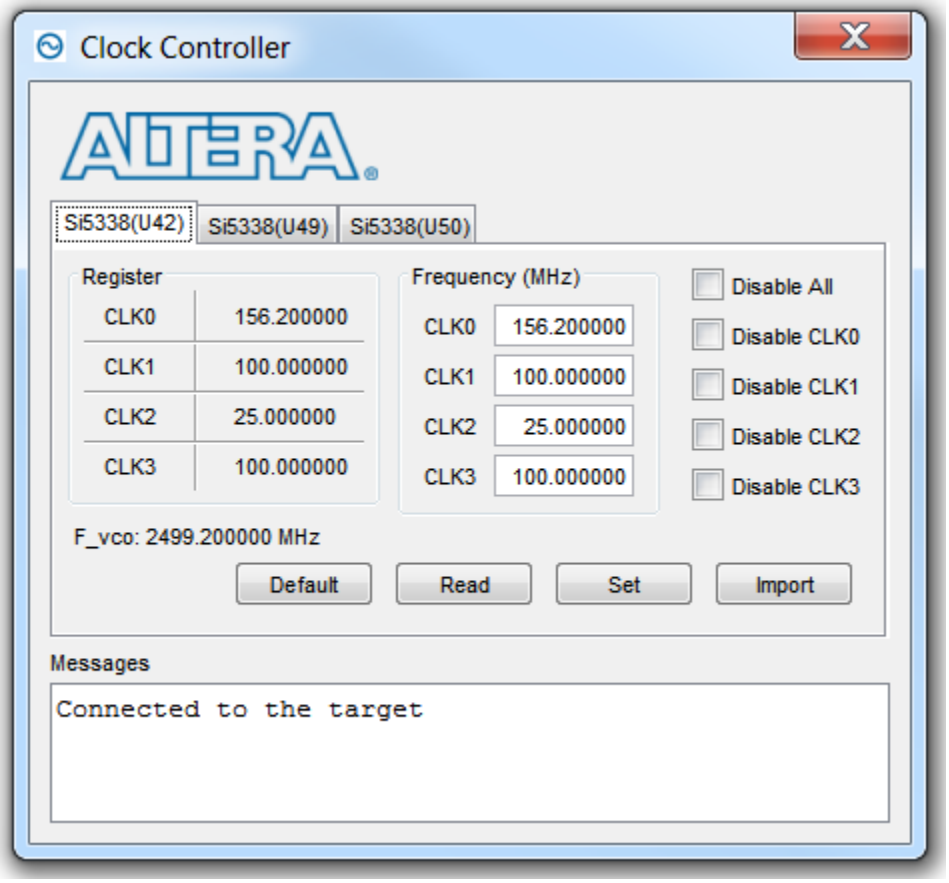

Each Si5338 tab displays the same GUI controls for each clock generators. Each tab allows for separate control. The Si5338 is capable of synthesizing four independent user-programmable clock frequencies up to 350 MHz and select frequencies up to 710 MHz.

Control	Description
F_vco	Displays the generating signal value of the voltage-controlled oscillator.
Registers	Display the current frequencies for each oscillator.
Frequency (MHz)	Allows you to specify the frequency of the clock.
Disable all	Disable all oscillators at once.

continued...

Control	Description
Read	Reads the current frequency setting for the oscillator associated with the active tab.
Default	Sets the frequency for the oscillator associated with the active tab back to its default value. The default is restored by power cycling the board.
Set	Sets the programmable oscillator frequency for the selected clock to the value in the CLK0 to CLK3 controls for each Si5338. Frequency changes might take several milliseconds to take effect. You might see glitches on the clock during this time. Altera recommends resetting the FPGA logic after changing frequencies.
Import	Import register map file generated from Silicon Laboratories ClockBuilder Desktop.

5. Board Components

This chapter introduces the major components on the Arria 10 SoC development board. The board overview figure illustrates the component locations and the board components table provides a brief description of all component features of the board.

A complete set of schematics, a physical layout database, and fabrication files for the development board reside in the Arria 10 SoC development kit board design files directory.

5.1. Board Overview

This section provides an overview of the Arria 10 SoC development board, including an annotated board image and component descriptions. The figure below shows an overview of the board features.

Figure 22. Overview of the Arria 10 SoC Development Board

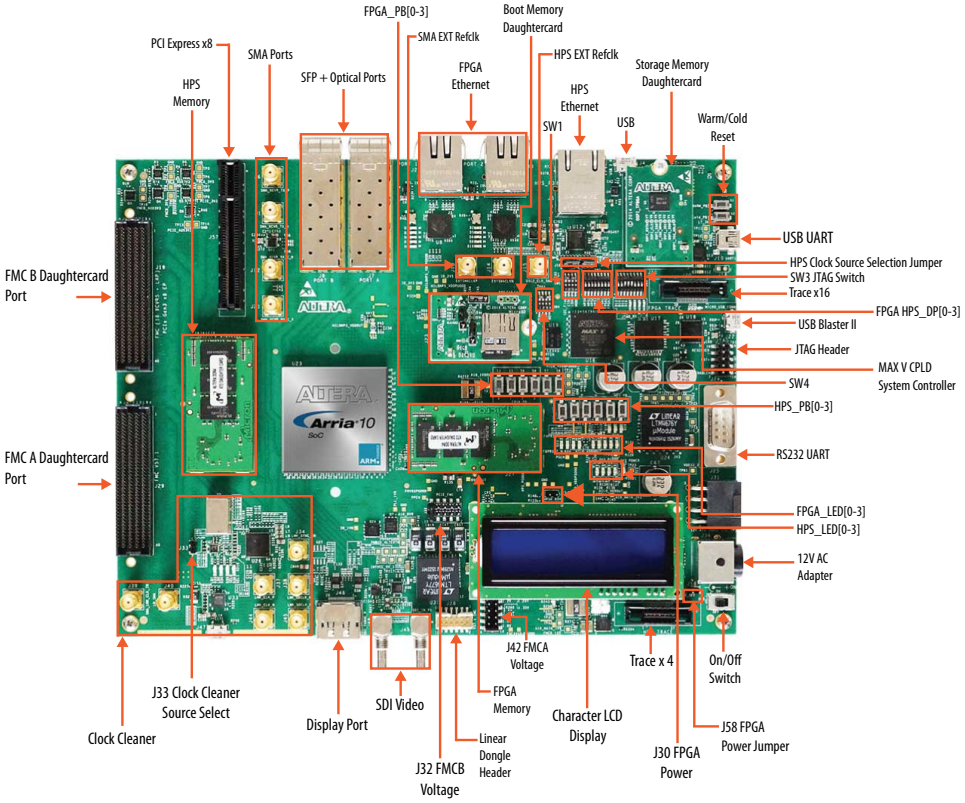

Intel Corporation. All rights reserved. Intel, the Intel logo, and other Intel marks are trademarks of Intel Corporation or its subsidiaries. Intel warrants performance of its FPGA and semiconductor products to current specifications in accordance with Intel's standard warranty, but reserves the right to make changes to any products and services at any time without notice. Intel assumes no responsibility or liability arising out of the application or use of any information, product, or service described herein except as expressly agreed to in writing by Intel. Intel customers are advised to obtain the latest version of device specifications before relying on any published information and before placing orders for products or services.
*Other names and brands may be claimed as the property of others.

ISO 9001:2015 Registered

Table 15. Board Components

Board Reference	Type	Description
Featured Devices		
U23	FPGA	Arria 10 SoC, 10AS066N3F40E2SG, 1517-pin FBGA
U16	CPLD	MAX V CPLD System Controller, 5M2210ZF256, 256-pin FBGA
U21	CPLD	IO_MUX_CPLD, 5M2210F256, 256-pin FBGA
Configuration, Status, and Setup Elements		
J24 (JTAG)	JTAG chain header	Provides access to the JTAG scan chain and disables the on-board USB-Blaster II when using an external JTAG debugger such as a USB-Blaster cable.
SW3	JTAG chain control DIP switch	Remove or include devices in the active JTAG chain.
SW4	MSEL DIP Switch	Controls the configuration scheme on the board. MSEL pin 0, 1 and 2 connect to the DIP switch.
J22 (MICRO_USB_CONN)	Micro-USB header	USB interface to on-board USB-Blaster II JTAG for programming and debugging HPS, FPGA, or MAX V CPLD via a type-B Micro-USB cable.
SW1	Function Dip switch	Selects I^2C Master, Controls PCIE slot power, and selects FPGA image source.
S8	Program select push button	Toggles the program select LEDs, which selects the program image that loads from flash memory to the FPGA.
S7	Configure push button	Load image from flash memory to the FPGA based on the settings of the program select LEDs.
D18	Configuration done LED	Illuminates when the FPGA is configured.
D19	Load LED	Illuminates when the MAX V CPLD 5M2210 System Controller is actively configuring the FPGA.
D17	Error LED	Illuminates when the FPGA configuration from flash memory fails.
D42	Power LED	Illuminates when 3.3-V power is present.
D13, D14	JTAG TX/RX LEDs	Indicates the transmit or receive activity of the JTAG chain. The TX and RX LEDs flicker if the link is in use and active. The LEDs are either off when not in use or on when in use but idle.
D20-D22	Program select LEDs	Illuminates to show which flash memory image loads to the FPGA when you press the program select push button.
D23, D24	FMC port present LEDs	Illuminates when a daughtercard is plugged into the FMC port.
D11, D12	UART LEDs	Illuminates when UART transmitter and receiver are in use.
Clock Circuitry		
U42	Multi-output oscillator	Si5338A quad-output fixed oscillator with 156.25 MHz, 100MHz, 25MHz, and 100MHz outputs.
U54	148.5-MHz Oscillator	Programmable oscillator with a default frequency of 148.5 MHz. The frequency is programmable using the clock control GUI running on the MAX V CPLD 5M2210 System Controller.
U51	50-MHz oscillator	50.000-MHz crystal oscillator for general purpose logic

continued...

Board Reference	Type	Description
U11	Multi-output oscillator	Two 100 MHz outputs for PCIe application
J13, J14	Clock input SMA connector	External clock inputs for the transceiver test port
J15	HPS SMA clock	Drives LVCMOS to HPS clock multiplexer.
U50	Multi-output oscillator	Si5338A quad-output fixed oscillator with 125MHz, 270MHz, 100MHz, and 100MHz outputs.
U49	Multi-output oscillator	Si5338A quad-output fixed oscillator with four 133.33MHz outputs.
U26	Multi-output clock cleaner	LMK04828 Clock cleaner
General User Input/Output		
D25-D32	User LEDs	Four user LEDs and four HPS LEDs. Illuminate when driven low.
SW2	User DIP switch	User DIP switch. When the switch is ON, a logic 0 is selected.
S10	FPGA reset push button	Reset the FPGA logic
S9	HPS External Interrupt Push button	HPS external interrupt
S3-S6 S11-S14	General user push buttons	Four user push buttons and four HPS push buttons. Driven low when pressed.
S1, S2	HPS reset push buttons	HPS cold/warm reset push buttons
Memory Connectors		
J26	HPS HILO Memory connector	HPS memory card include DDR3 HILO memory card and DDR4 HILO memory card
J23	Boot Flash Connector	Boot flash card options include QSPI flash card, SD micro flash card and NAND flash card
J27	FPGA HILO Connector	FPGA memory card options include DDR3 HILO memory card , and DDR4 HILO memory card
U19	EPCQ Flash	EPCQ flash for FPGA AS configuration
U45	I^2C EEPROM	32-Kb I^2C serial EEPROM
Communication Ports		
J57	PCI Express socket	GEN3 x8 Socket
J29, J19	FMC port	J29 is a V57.1 compatible FMC connector. J19 is a FMC connector defined by Altera 16 transceivers specification
J7, J8	SFP+ port	Two SFP+ ports
U12, J5	Gigabit Ethernet port	RJ-45 connectors that provide HPS 10/100/1000 Ethernet connections via a Micrel KSZ9031RN PHY.
U8, J2 (Port 1)	Gigabit Ethernet port	SGMII Gigabit Ethernet port through FPGA transceiver
U9, J3 (Port 2)	Gigabit Ethernet port	SGMII Gigabit Ethernet port through FPGA transceiver
J10, U13 (UART 1)	USB-UART Port	Mini-B USB interface to USB-to-UART bridge for serial UART interface.
J25	DB9 UART port	DB9 RS-232 UART Port

continued...

Board Reference	Type	Description
U22, J4 (USB 2.0)	USB OTG port	USB 2.0 On-The-Go (OTG) interface.
U5	Real-time clock	DS1339 device with built-in power sense circuit that detects power failures and automatically switches to backup battery supply, maintaining time keeping even when the board is not powered.
J43 (HPS TRACE)	Mictor-38	4-bit Trace for HPS debug
J20 (FPGA TRACE)	Mictor-38	FPGA 16-bit Trace
Video and Display Ports		
J35	Character LCD	Connector that interfaces to the included 16 character × 2 line LCD module along with two standoffs.
J36	Display port connector	Display port interface
U29, J48 (SDI_TXBNC_P)	SDI Video output port	HDBNC 75-Ohm SDI video TX interface
U30, J49 (SDI_IN_P1)	SDI Video input port	HDBNC 75-Ohm SDI video RX interface
Power Supply		
J36	DC input jack	Accepts 12-V DC power supply
SW5	Power switch	Switch to power on or off the board when power is supplied from the DC input jack.

5.2. Featured Device: Arria 10 SoC

The Arria 10 SoC development board features an Arria 10 SoC 10AS066N3F40E2SG device (U23) that includes a hard processor system (HPS) with integrated ARM® Cortex™- A9 MPCore processor.

Table 16. Arria 10 SoC Features

Resources	10AS066N2F40
LE (K)	660
ALM	250, 540
Register	1,002,160
Memory (Kb)	42,660
18-bit x 18-bit Multiplier	3,356
Transceivers	48

5.3. MAX V CPLD 5M2210 System Controller

The board utilizes the 5M2210ZF256 System Controller, an Altera MAX V CPLD, for the following purposes:

- Power sequencer
- System reset controller
- PCIe, FMC slot power sequencer
- FPGA PS configuration controller
- I^2C Master controller
- UART Level shifter
- HPS SPI I/O expander
- HPS Shared I/O

Table 17. MAX V CPLD System Controller Device Pin Out

I/O Bank	Board Reference	Pin Name	Pin Type	I/O Standard	Description
3	E14	P0V9Pgood	Schmitt trigger input	3.3 V	Power good signal of 0.9 V power rail (Active high)
3	C14	HPS_Pgood	Schmitt trigger input	3.3 V	HPS core voltage power good signal
3	C15	PN0V95pgood	Schmitt trigger input	3.3 V	0.95 V Power supply power good signal (Active high)
3	E13	1V0_Pgood	Schmitt trigger input	3.3 V	1V0 Power supply power good signal (Active high)
3	E12	1V8_Pgood	Schmitt trigger input	3.3 V	1V8 Power supply power good signal (Active high)
3	D15	2V5_Pgood	Schmitt trigger input	3.3 V	2V5 Power supply power good signal (Active high)
3	F14	3V3_Pgood	Schmitt trigger input	3.3 V	3V3 Power supply power good signal (Active high)
3	D16	PGM_LED2	OC	3.3 V	FPGA status LED.
3	F13	5V0_Pgood	Schmitt trigger input	3.3 V	5V0 Power supply power good signal (Active high)
3	E15	HILOHPS_VDDPGood	Schmitt trigger input	3.3 V	HPS_HILO Power supply power good signal
3	E16	HILO_VDDPGood	Schmitt trigger input	3.3 V	HILO VDD power supply power good signal
3	F15	HILO_VDDQPGood	Schmitt trigger input	3.3 V	HILO VDDQ power supply power good signal
3	G14	FMCAVADJPGood	Schmitt trigger input	3.3 V	FMC VADJ Power supply power good signal
3	F16	FMCBVADJPGood	Schmitt trigger input	3.3 V	FMC VADJ Power supply power good signal
3	G13	10V_Fail_n	Schmitt trigger input	3.3 V	A10_12V input below 10.11 V (Active low)

continued...

I/O Bank	Board Reference	Pin Name	Pin Type	I/O Standard	Description
3	G15	10V_good	Schmitt trigger input	3.3 V	A10_12V input above 10.62 V (Active low)
3	G12	LTFAUL0	Input/Output	3.3 V	LT2977 Fault signal
3	G16	LTPWRGD	Input/Output	3.3 V	LT2977 Power good input
3	H14	FAC2MPgood	Output	3.3 V	30 ms delay after FMCA_EN and FMCA_AUXEN is enabled.
3	H15	FBC2MPgood	Output	3.3 V	30 ms delay after FMCB_EN and FMCB_AUXEN is enabled.
3	H13	FAM2CPgood	Schmitt trigger input	3.3 V	This flag indicates the power from FMC DC card is good when MAX V I/O CPLD BANK3 power uses FMC POWER.
3	H16	TSENSE_ALERTn	Schmitt trigger input	3.3 V	SMBUS Alert Bit when I^2C hangs
3	J13	OVERTEMPn	Schmitt trigger input	3.3 V	Temperature is above threshold
3	J16	FAN_EN	Output	3.3 V	FAN Enable (Active high)
3	J12	MAXV_USB_CLK	Clock input	3.3 V	Clock input from USB-blaster
3	H12	NC	-		-
3	J14	NC	-		-
3	J15	A10_EN	Output	3.3 V	Arria 10 12 V input enable (Active high)
3	K16	A10_0V9_EN	Output	3.3 V	0.9 V Power supply enable (Active high)
3	K13	A10_0V95_EN	Output	3.3 V	0.95 V Power supply enable (Active high)
3	K15	A10_1V0_EN	Output	3.3 V	1.0 V Power supply enable (Active high)
3	K14	A10_1V8_EN	Output	3.3 V	1.8 V Power supply enable (Active high)
3	L16	IO_EN	Output	3.3 V	Arria 10 I/O power enable (Active high)
3	L11	PCIE_Auxen	Output	3.3 V	PCIE Aux power enable (Active high)
3	L15	PCIE_EN	Output	3.3 V	PCIE 3V3 enable (Active high)
3	L12	FMCA_AUXEN	Output	3.3 V	FMCA Aux power enable (Active high)
3	M16	FMCA_EN	Output	3.3 V	FMCA3V3 enable (Active high)
3	L13	FMCB_AUXEN	Output	3.3 V	FMCB Aux Power enable (Active high)

continued...

I/O Bank	Board Reference	Pin Name	Pin Type	I/O Standard	Description
3	M15	FMCB_EN	Output	3.3 V	FMCB3V3 enable (Active high)
3	L14	Pmbus_Altertn	Schmitt trigger input	3.3 V	Pmbus Alert Bit input when I^2C hangs.
3	N16	IO3V3_Discharge	Output	3.3 V	6A discharge load for IO3V3 (Active high)
3	M13	PLL1V8_discharge	Output	3.3 V	3A discharge load for IO3V3 (Active high)
3	N15	NC			
3	N14	LTCNTRL0	Output	3.3 V	LT2977 Control 0
3	P15	LTCNTRL1	Output	3.3 V	LT2977 Control 1
3	P14	LTWDI_RESETN	Output	3.3 V	LT2977 reset
3	D13	FAPRSNT_n	Schmitt trigger input	3.3 V	Detects signal of FMCA DC card
3	D14	FBPRSNT_N	Schmitt trigger input	3.3 V	Detects signal of FMCB DC card
3	F11	USB_Vflagn	Schmitt trigger input	3.3 V	Overcurrent flag of EXT USB power
3	F12	NC	-		-
3	K12	NC	-		-
3	M14	NC	-		-
3	N13	NC	-		-
4	R1	A10_2L_SDA	Input/OC	3.3 V	I^2C data line.
4	P4	A10_2L_SCL	OC	3.3 V	I^2C clock line.
4	T2	A10I2CEN	Output	3.3 V	Enable Arria 10 HPS I^2C. (Active high)
4	P5	A10PMBUSEN	Output	3.3 V	Enable Arria 10 FPGA I^2C. (Active high)
4	R3	A10_PMBUSDIS_N	Output	3.3 V	Disables Arria 10 FPGA PMBus access. (Active low)
4	N5	UARTA_RX	Input	3.3 V	HPS UART RX input from USB-UART.
4	P6	UARTA_TX	Output	3.3 V	HPS UART TX output to USB-UART.
4	N6	PCIE_PRSNT2n	Input	3.3 V	Detects signal from PCIe DC card.
4	R5	SFPA_LOS	Input	3.3 V	SFP+ A socket loss signal. (Active low)
4	M6	SFPA_TXFAULT	Input	3.3 V	SFP+ A socket TX fault signal. (Active low)
4	T5	SFPGA_TXDISABLE	Output	3.3 V	SFP+ A socket TX disable signal. (Active low)

continued...

I/O Bank	Board Reference	Pin Name	Pin Type	I/O Standard	Description
4	P7	SFPA_RATESEL0	Output	3.3 V	SFP+ A RX signaling rate selection, 0<4.25 GBd, 1 > 4.25 GBd
4	R6	SFPA_RATESEL1	Output	3.3 V	SFP +A TX signaling rate selection, 0<4.25 GBd, 1 > 4.25 GBd
4	N7	SFPB_TXDISABLE	Output	3.3 V	SFP+ B socket TX disable signal. Active low
4	M7	SFPB_RATESEL0	Output	3.3 V	SFP+ B RX signaling rate selection, 0<4.25 GBd, 1 > 4.25 GBd
4	R7	SFPB_RATESEL1	Output	3.3 V	SFP +B TX signaling rate selection, 0<4.25 GBd, 1 > 4.25 GBd
4	P8	SFPB_LOS	Input	3.3 V	SFP+ A socket loss signal (Active low)
4	T7	SFPB_TXFAULT	Input	3.3 V	SFP+ A socket tx fault signal (Active low)
4	N8	SFPA_MOD0_PRSNTn	Input	3.3 V	Detect signal of SFP+ module in slot A (Active low)
4	R8	SFPB_MOD0_PRSNTn	Input	3.3 V	Detect signal of SFP+ module in Slot B. (Active low)
4	T8	NC	-	3.3 V	-
4	T9	NC	-	3.3 V	-
4	R9	Eneta_HPS_Intn	Input	3.3 V	Interrupt input from Ethernet port 3
4	M9	Logic_resetn	Input	3.3 V	FPGA_logic reset input
4	M8	EXT_intn	Input	3.3 V	HPS External interrupt
4	M10	UART1_RX	Input	3.3 V	DB9 RS232 UART RX
4	R10	UART1_TX	Output	3.3 V	DB9 RS232 UART TX
4	N10	NC	Output	3.3 V	-
4	T11	LMK_reset	Output	3.3 V	LMK Clock cleaner reset (Active high)
4	P10	NC	-	3.3 V	-
4	R11	NC	-	3.3 V	-
4	T12	ENET_HPS_RESETn	Output	3.3 V	Ethernet port 3 reset (Active low)
4	N11	USB_RESET	Output	3.3 V	USB PHY reset (Active high)
4	T13	PCIE_PERSTn	Output	3.3 V	This signal needs to be held low if PCIE_auxEn and PCIE_EN are not active. 15 ms delay to set

continued...

I/O Bank	Board Reference	Pin Name	Pin Type	I/O Standard	Description
					this high after PCIE_EN is active. PCIe RC slot reset, active low.
4	R13	RESET_HPS_UARTA_N	Output	3.3 V	UART_RESET (Active low)
4	R12	MAX2toMAXV0	Input/Output	3.3 V	Interbus between MAX II and MAX V
4	P11	MAX2toMAXV1	Input/Output	3.3 V	Interbus between MAX II and MAX V
4	N12	MAX2toMAXV2	Input/Output	3.3 V	Interbus between MAX II and MAX V
4	R14	MAX2toMAXV3	Input/Output	3.3 V	Interbus between MAX II and MAX V
4	P12	MAX2toMAXV4	Input/Output	3.3 V	Interbusbetween MAX II and MAX V
4	T15	MAX2toMAXV5	Input/Output	3.3 V	Interbus between MAX II and MAX V
4	R16	MAX2toMAXV6	Input/Output	3.3 V	Interbus between MAX II and MAX V
4	P13	MAX2toMAXV7	Input/Output	3.3 V	Interbus between MAX II and MAX V
4	M11	MAX2toMAXV8	Input/Output	3.3 V	Interbus between MAX II and MAX V
4	M12	MAX2toMAXV9	Input/Output	3.3 V	Interbus between MAX II and MAX V
4	N9	MAX2toMAXV10	Input/Output	3.3 V	Interbus between MAX II and MAX V
4	R4	MAX2toMAXV11	Input/Output	3.3 V	Interbus between MAX II and MAX V
4	T10	MAX2toMAXV12	Input/Output	3.3 V	Interbus between MAX II and MAX V
4	T4	MAX2toMAXV13	Input/Output	3.3 V	Interbus between MAX II and MAX V
2	D4	USER_LED_FPGA0	OC	2.5 V	USER FPGA LED 0 output
2	B1	USER_LED_FPGA1	OC	2.5 V	USER FPGA LED 1 output
2	C5	USER_LED_FPGA2	OC	2.5 V	USER FPGA LED 2 output
2	C4	USER_LED_FPGA3	OC	2.5 V	USER FPGA LED 3 output
2	B4	USER_LED_HPS0	OC	2.5 V	HPS LED 0 output
2	D6	USER_LED_HPS1	OC	2.5 V	HPS LED 1 output
2	E6	USER_LED_HPS2	OC	2.5 V	HPS LED 2 output
2	B5	USER_LED_HPS3	OC	2.5 V	HPS LED 3 output
2	A5	MAX_ERROR	OC	2.5 V	Board abnormal indicator
2	D7	MAX_LOAD	OC	2.5 V	FPGA status LED

continued...

I/O Bank	Board Reference	Pin Name	Pin Type	I/O Standard	Description
2	B6	MAX_CONF_DONE	OC	2.5 V	FPGA status LED
2	E7	File_Presentn	Input	2.5 V	File flash present flag
2	C8	FACTORY_LOAD	OC	2.5 V	FPGA status LED
2	B7	PGM_LED0	OC	2.5 V	FPGA status LED
2	D8	PGM_SEL	Input	2.5 V	FPGA external trigger
2	A7	BF_Presentn	Input	2.5 V	Boot Flash present flag
2	B8	USER_DIPSW_HPS0	Input	2.5 V	User DIP HPS 0
2	A8	USER_DIPSW_HPS1	Input	2.5 V	User DIP HPS 1
2	A9	USER_DIPSW_HPS2	Input	2.5 V	User DIP HPS 2
2	E9	USER_DIPSW_HPS3	Input	2.5 V	User DIP HPS 3
2	B9	USER_DIPSW_FPGA0	Input	2.5 V	User DIP FPGA 0
2	D9	USER_DIPSW_FPGA1	Input	2.5 V	User DIP FPGA 1
2	A10	USER_DIPSW_FPGA2	Input	2.5 V	User DIP FPGA 2
2	C9	USER_DIPSW_FPGA3	Input	2.5 V	User DIP FPGA 3
2	E10	HPS_WARM_RESET1N	Input	2.5 V	Trace reset from MAX II (Active low)
2	A11	HPS_WAM_RESETn	Input	2.5 V	Warm reset Pushbutton (Active low)
2	B11	HPS_cold_resetn	Input	2.5 V	COLD reset Pushbuttion (Active low)
2	A12	DC_Power_CTRL	Input	2.5 V	DC card power on/off switch. 0 turn off DC power 1 turn on DC power
2	E11	I2C_flag	Input	2.5 V	I^2C master selection, '0' MAX V, '1' HPS
2	B12	PGM_CONFIG	Input	2.5 V	FPGA external trigger
2	C11	Security_mode	Input	2.5 V	FPGA mode bit
2	B13	PGM_LED1	OC	2.5 V	FPGA status LED
2	D12	MAXVtoMAXV4	Input/Output	2.5 V	Interbus between MAX Vs
2	B14	MAXVtoMAXV5	Input/Output	2.5 V	Interbus between MAX Vs
2	C13	MAXVtoMAXV6	Input/Output	2.5 V	Interbus between MAX Vs
2	B16	MAXVtoMAXV7	Input/Output	2.5 V	Interbus between MAX Vs
2	A13	MAXVtoMAXV8	Input/Output	2.5 V	Interbus between MAX Vs
2	A15	MAXVtoMAXV9	Input/Output	2.5 V	Interbus between MAX Vs
2	A2	USER_PB_HPS0	Input	2.5 V	HPS user push button 0
2	A4	USER_PB_HPS1	Input	2.5 V	HPS user push button 1
2	A6	USER_PB_HPS2	Input	2.5 V	HPS user push button 2

continued...

I/O Bank	Board Reference	Pin Name	Pin Type	I/O Standard	Description
2	B10	USER_PB_HPS3	Input	2.5 V	HPS user push button 3
2	B3	USER_PB_FPGA0	Input	2.5 V	FPGA user push button 0
2	C10	USER_PB_FPGA1	Input	2.5 V	FPGA user push button 1
2	C12	USER_PB_FPGA2	Input	2.5 V	FPGA user push button 2
2	C6	USER_PB_FPGA3	Input	2.5 V	FPGA user push button 3
2	C7	MAXVtoMAXV3	Input/Output	2.5 V	Interbus between MAX Vs
2	D10	MAXVtoMAXV10	Input/Output	2.5 V	Interbus between MAX Vs
2	D11	MAXVtoMAXV11	Input/Output	2.5 V	Interbus between MAX Vs
2	D5	MAXVtoMAXV12	Input/Output	2.5 V	Interbus between MAX Vs
2	E8	MAXVtoMAXV13	Input/Output	2.5 V	Interbus between MAX Vs
1	D3	MSEL0	Input	1.8 V	FPGA program mode selection
1	C2	MSEL1	Input	1.8 V	FPGA program mode selection
1	C3	MSEL2	Input	1.8 V	FPGA program mode selection
1	E3	MFD0	Input/Output	1.8 V	EPCQ data0
1	D2	MFD1	Input/Output	1.8 V	EPCQ data1
1	E4	MFD2	Input/Output	1.8 V	EPCQ data2
1	D1	MFD3	Input/Output	1.8 V	EPCQ data3
1	E5	CLK_50M_MAX	Output	1.8 V	50 MHz clock to FPGA
1	F3	MFCSN	Output	1.8 V	EPCQ chip select.
1	E1	MFCLK	Output	1.8 V	EPCQ chip clock.
1	F4	HPSUARTA_TX	Input	1.8 V	HPS UART TX.
1	F2	HPSUARTA_RX	Output	1.8 V	HPS UART RX.
1	F1	SPIM1_MOSI	Input	1.8 V	SPI data input.
1	F6	SPIM1_SS0_N	Input	1.8 V	SPI chip select 0
1	G2	SPIM1_SS1_N	Input	1.8 V	SPI chip select 1
1	G3	SPIM1_MISO	Output	1.8 V	SPI data output.
1	G1	MAXVtoMAXV0	Input/Output	1.8 V	Interbus between MAX Vs
1	G4	MAXVtoMAXV1	Input/Output	1.8 V	Interbus between MAX Vs
1	H2	MAXVtoMAXV2	Input/Output	1.8 V	Interbus between MAX Vs
1	G5	MAX_IO_CLK	Output	1.8 V	50Mhz Clock Output to IO MAXV CPLD
1	H3	A10SH_GPIO0	Input/Output	1.8 V	HPS GPIO 5
1	J1	A10SH_GPIO1	Input/Output	1.8 V	HPS GPIO 13
1	H4	A10SH_GPIO2	Input/Output	1.8 V	HPS GPIO 16

continued...

I/O Bank	Board Reference	Pin Name	Pin Type	I/O Standard	Description
1	J2	A10SH_GPIO3	Input/Output	1.8 V	HPS GPIO 17
1	H5	CLK_50M_MAX	Input	1.8 V	MAX V 50 MHz reference clock
1	J5	SPIM1_CLK	Input	1.8 V	SPIM1_CLK input
1	J4	PS_D0	Output	1.8 V	Passive configure D0
1	K1	Nconfig	Output	1.8 V	Passive configure Nconfig output
1	J3	DCLK	Output	1.8 V	Program Clock
1	K2	CVP_configDone	Input	1.8 V	CVP configure done input during configuration, UART_TX after configuration
1	K5	NSTATUS	Input	1.8 V	Status bit during FPGA configuration
1	L1	conf_done	Input	1.8 V	Configuration done
1	L2	DEV_CLRN	Output	1.8	FPGA reset bit
1	K3	CRCerror	Output	1.8 V	CRCerror during configuration, UART_RX after configuration
1	M1	Dedicated_TX	Input	1.8 V	Dedicated UART TX input
1	M2	Daticated_RX	Output	1.8 V	Dedicated UART RX Output
1	L4	FPGA_IO5	Input	1.8 V	FPGA_IO5
1	L3	FPGA_IO4	Output	1.8 V	FPGA_IO4
1	N1	FPGA_IO3	Output	1.8 V	FPGA_IO3
1	M4	FPGA_IO2	Output	1.8 V	FPGA_IO2
1	N2	FPGA_IO1	Input/Output	1.8 V	FPGA_IO1
1	M3	FPGA_IO0	Input/Output	1.8 V	FPGA_IO0
1	N3	PCIE1V8_PERSTn	Output	1.8 V	15 ms delay PCIE-PHY 0_Reset after PCIE_En is activated if I/O MAX V function is disabled.
1	P2	PCIE1V8_PERST1n	Output	1.8 V	PCIE_PHY1 reset must be connected to the I/O MAX V bit R16 (FBLAP33) via interbus if the I/O MAX V function is disabled.
1	E2	BQSPI_RESETN	Input/Output	1.8 V	Boot flash reset
1	F5	HPS_NPOR	Output	1.8 V	NPOR output of HPS
1	H1	HPS_NRST	Output	1.8 V	NRST output of HPS
1	K4	FILE_RESETN	Output	1.8 V	File flash reset
1	L5	Dedicated_OE	Input	1.8 V	Dedicated UART Enable input

continued...

I/O Bank	Board Reference	Pin Name	Pin Type	I/O Standard	Description
1	P3	M5_JTAG_TCK	Input	1.8 V	JTAG clock
1	L6	M5_JTAG_TDI	Input	1.8 V	JTAG data in
1	M5	M5_JTAG_TDO	Output	1.8 V	JTAG data out
1	N4	M5_JTAG_TMS	Input	1.8 V	JTAG_TMS

5.4. Configuration

This section describes the FPGA, I/O MUX CPLD, and MAX V CPLD 5M2210 System Controller device programming methods supported by the Arria 10 SoC development board.

The Arria 10 SoC development board supports the following configuration methods using JTAG:

- On-board USB-Blaster II is the default method for configuring the FPGA using the Quartus Prime Programmer in JTAG mode with the supplied USB cable.
- External Mictor connector for configuring the HPS using the ARM DS-5 Altera Edition software and DSTREAM or JTAG debug and trace tools such as Lauterbach TRACE32.
- External USB-Blaster for configuring the FPGA when you connect the external USB-Blaster to the JTAG header (J24).

5.4.1. System Controller Configuration

J58 is used to turn off the FPGA power. The following table lists the status of each J58 configuration.

Table 18. J58 Jumper Settings

Board Reference	Description
J58	• OPEN: Normal application • SHORT: No power to FPGA

Caution: The MAX V system controller controls the power sequence. The wrong configuration file may damage the board.

The following procedure must be followed to program the system controller MAX V:

1. Short J58
2. Set SW3 Bits to:

Table 19. SW3 System Configuration Mode for System Controller MAX V Programming

Bit1	Bit2	Bit3	Bit4	Bit5	Bit6	Bit7	Bit8
ON	ON	ON	ON	ON	OFF	OFF	ON

3. Turn on the power; the red LED will be flashing
4. Connect the USB cable to the on-board USB-Blaster II

5. Use "autodetect" in Quartus Prime to detect MAX V
6. Click **Change File** and select `\examples\max5\PRD \system_max5\system_max5.pof`
7. Turn on **Program/Configure** option for the selected **.pof** file, click **Start** to download it to MAX V. Configuration is complete when the progress bar reaches 100%
8. Turn off the power and remove J58
9. Set SW3 to normal operation mode

   Refer to the Table 3-4 in Default Switch and Jumper Settings on page 16 for SW3 configuration.
10. Turn on the power; the red LED will be on until the FPGA is configured

5.4.2. FPGA and I/O MUX CPLD Programming over On-Board USB-Blaster II

Table 20. SW3 Configuration for On-Board USB-Blaster II Mode

Bit1	Bit2	Bit3	Bit4	Bit5	Bit6	Bit7	Bit8
OFF	OFF	ON	ON	ON	OFF	OFF	OFF

This configuration method implements a micro-USB connector (J22), a USB 2.0 PHY device (U18), and an Altera MAX II CPLD EPM1270M256C4N (U17) to allow FPGA configuration using a USB cable. This USB cable connects directly between the USB connector on the board and a USB port on a PC running the Quartus Prime software.

The on-board USB-Blaster II in the MAX II CPLD EPM1270M256C4N normally masters the JTAG chain. The on-board USB-Blaster II shares the pins with the external header and is automatically disabled when you connect an external USB-Blaster to the JTAG chain through the JTAG header (J24). In addition to the JTAG interface, the on-board USB Blaster II has trace capabilities for HPS debug purposes. The trace interface from the HPS routes to the on-board USB-Blaster II connection pins through the FPGA.

Figure 23. JTAG Chain

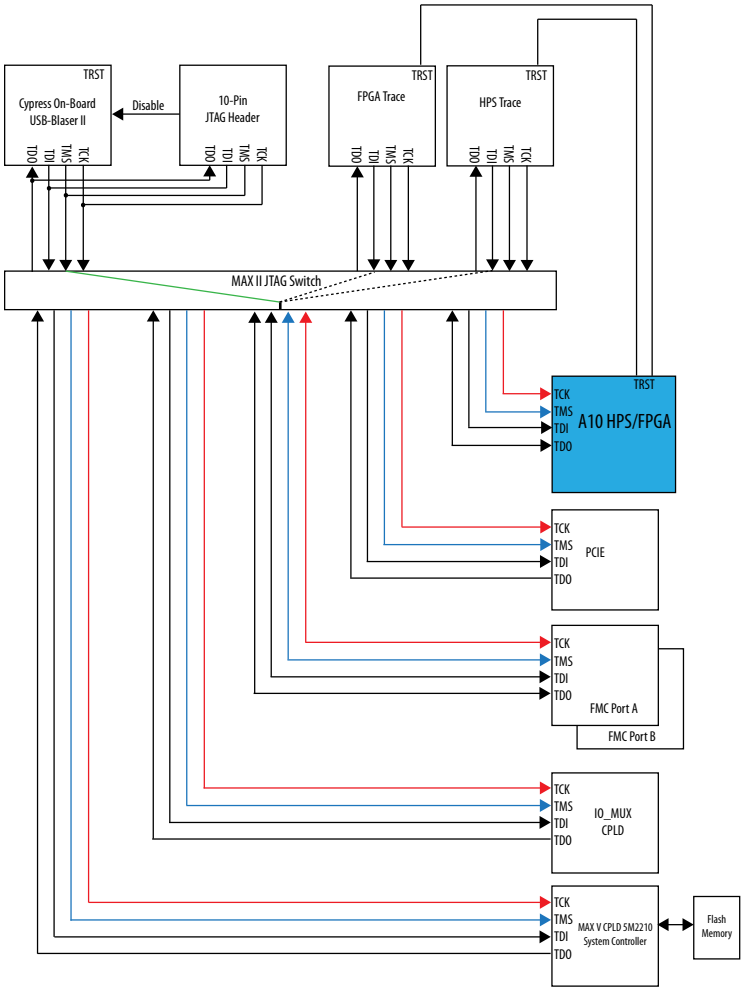

Note: If an external USB-Blaster (I/II) cable is plugged into the EXTERNAL JTAG HEADER, the MAX II automatically uses it as the master despite any DIP switch setting.

The MAX II CPLD (EPM1270M256C4N) is dedicated to the on-board USB-Blaster II functionality only, connecting to the USB 2.0 PHY device on one side and driving JTAG signals out the other side on the GPIO pins. This device's own dedicated JTAG interface is routed to a small surface-mount header only intended for debugging of first article prototypes.

5.4.3. FPGA Programming by HPS

The default method is to use the factory design—Golden Hardware Reference Design (GHRD).

Table 21. HPS FPGA Configuration

Configuration	Switch Position
HPS FPGA	SW4.4:OFF(Down)=MSEL2 is 0
	SW4.3:OFF(Down)=MSEL1 is 0
	SW4.2:OFF(Down)=MSEL0 is 0

Table 22. AS Configuration

Configuration	Switch Position
Active Serial (AS)	SW4.4:OFF(Down)=MSEL2 is 0
	SW4.3:ON(Up)=MSEL1 is 1
	SW4.2:ON(Up)=MSEL0 is 1

On power-up or by pressing the warm/cold reset push button, the HPS downloads the GHRD design from boot flash to configure the FPGA. The D17 (Error LED) is turned off and D18 (Configuration done LED) is turned on after the FPGA is configured.

By default the FPGA is configured by the HPS.

Refer to the GSRD User Manual for more information.

5.4.4. FPGA Programming by EPCQ Device

An EPCQ device is used for FPGA configuration in Active Serial (AS) mode on power up. The EPCQ device with non-volatile memory features a simple six-pin interface and a small form factor. The EPCQ supports AS x1 and x4 modes.

5.4.5. FPGA Programming over External USB-Blaster

The JTAG chain header provides another method for configuring the FPGA using an external USB-Blaster device with the Quartus Prime Programmer running on a PC. To prevent contention between the JTAG masters, the on-board USB-Blaster is automatically disabled when you connect an external USB-Blaster to the JTAG chain through the JTAG chain header.

5.5. Status Elements

The development board includes status LEDs. This section describes the status elements.

Table 23. Board Specific LEDs

Board Reference	Type	Description
D18	Configuration done LED	Illuminates when the FPGA is configured.
D19	Load LED	Illuminates when the MAX V CPLD 5M2210 System Controller is actively configuring the FPGA.
D17	Error LED	Red LED illuminates when the FPGA configuration from flash memory fails.
D42	Power LED	Illuminates when 3.3-V power is present.
D13, D14	JTAG TX/RX LEDs	Indicate the transmit or receive activity of the JTAG chain. The TX and RX LEDs flicker if the link is in use and active. The LEDs are either off when not in use or on when in use but idle.
D20-D22	Program select LEDs	Illuminates to show which flash memory image loads to the FPGA when you press the program select push button.
D23, D24	FMC port present LEDs	Illuminates when a daughtercard is plugged into the FMC port.
D11, D12	UART LEDs	Illuminates when the UART transmitter and receiver are in use.

5.6. Setup Elements

The development board includes several different kinds of setup elements. This section describes the following setup elements:

- Board settings DIP switch
- JTAG chain control DIP switch
- FPGA configuration mode DIP switch
- HPS jumpers
- CPU reset push button
- Logic reset push button
- Program configuration push button
- Program select push button

5.6.1. Board Settings DIP Switch

The board settings DIP switches (SW1 and SW4) control various features specific to the board and the MAX V CPLD 5M2210 System Controller logic design. Refer to the "Defulat Switch and Jumper Settings" section for more information on SW1 and SW4.

Related Information

Default Switch and Jumper Settings on page 16

5.6.2. JTAG Chain Control DIP Switch

The JTAG chain control DIP switch (SW3) either removes or includes devices in the active JTAG chain.

The SW3 switch select controls the JTAG master/slave select. The DIP switch *MSTR* switches control the master select. The other 5 pins are bypass pins for the various available JTAG slaves. The following slaves are available and can be bypassed by moving the corresponding bypass switch to the 'ON' position.

Table 24. JTAG Configuration Modes

Switch 3 Bit	Board Label	Function
1	Arria 10	ON- Arria10 JTAG Bypass OFF- Arria10 JTAG Enable
2	I/O MAX V	ON- MAXV JTAG Bypass OFF- MAXV JTAG Enable
3	FMCA	ON- FMCA JTAG Bypass OFF- FMCA JTAG Enable
4	FMCB	ON- FMCB JTAG Bypass OFF- FMCB JTAG Enable
5	PCIe	ON- PCIe JTAG Bypass OFF- PCIe JTAG Enable
6	`MSTR[0]`	Refer to Table 25 on page 65
7	`MSTR[1]`	Refer to Table 25 on page 65
8	`MSTR[2]`	Refer to Table 25 on page 65

The MSTR switch settings and their meanings can be seen in the table below.

Table 25. Modes for Master Switches

MSTR2	MSTR1	MSTR0	Modes
ON	ON	ON	BOOT
OFF	ON	ON	FMCA JTAG Master
ON	OFF	ON	FMCB JTAG Master
ON	ON	OFF	FTRACE JTAG Master
OFF	OFF	OFF	On-Board USB-Blaster II JTAG Master
ON	OFF	OFF	System Configuration Mode
OFF	ON	OFF	GUI Test Mode
OFF	OFF	ON	Reserved

The bypass switch settings dictate which slaves are in/out of the chain, but see below for the order if all were enabled in the chain.

1. Arria 10
2. IO_MAXV
3. PCIe
4. FMCA
5. FMCB

5.6.3. Reference Clock Source Selection

The HPS jumpers define the bootstrap options for the HPS—boot source, mode, HPS clocks settings, power-on-reset (POR) mode and peripherals selection.

Table 26. HPS Jumpers

Board Reference	Schematic Signal Name	Description
J17, J16	OSC2_CLK_SEL [1:0]	Selects the source of OSC2 clock: 00—Select 25 MHz clock source 01—Select external source via SMA connector 10—Select 33 MHz on-board oscillator
J30	HPS voltage selection	Short—HPS core voltage is 0.95V Open—HPS core voltage is 0.9V

5.6.4. CPU Reset Push Button

Table 27. CPU Reset Push Buttons

Push Button	Description
S1	HPS_WARM_RESET push button.
S2	HPS_COLD_RESET push button.

The HPS_NRST input is driven by HPS_WARM_RESET. The HPS_NPOR input is driven by HPS_COLD_RESET.

5.6.5. Logic Reset Push Button

The logic reset push button (S10) is an input to the MAX V CPLD 5M2210 System Controller. This push button is the default reset for the CPLD logic and FPGA.

5.7. General User Input/Output

All user-defined push buttons, DIP switches and LEDs are connected to the MAX V System Controller. The IO_MUX CPLD maps user-defined signals to FPGA I/Os as defined in the GHRD. The following section describes the mapping table.

Table 28. I/O MAX V Application Modes

User DIP Switch [3:0]	Description
0000	Default FPGA mode
0001	Reserve
0010	Reserve
0011	Reserve
0100	Reserve
0101	Reserve
0110	Reserve

continued...

User DIP Switch [3:0]	Description
0111	Reserve
1000	SDI mode
1001	DP_mode
1010	PCIE EP mode
1011	Reserve
1100	Reserve
1101	Reserve
1110	Reserve
1111	Reserve

5.7.1. Character LCD

The development board includes a single 10-pin 0.1" pitch single-row header that interfaces to a 2 line × 16 character Lumex character LCD using a standard I^2C interface connected to the HPS.

For more information such as timing, character maps, interface guidelines, and other related documentation, visit http://www.newhavendisplay.com.

5.8. Clock Circuitry

This section describes the board's clock inputs and outputs.

5.8.1. On-Board Oscillators

Figure 24. FPGA I/O Bank Clock Connection

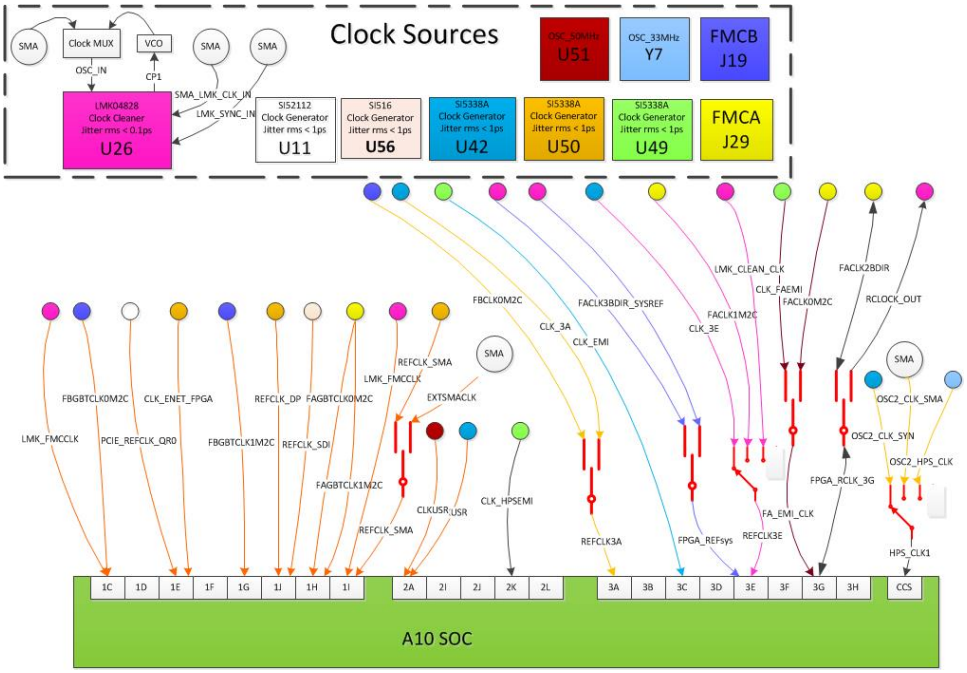

Match the colors in the above figure to match the FPGA I/O banks with its corresponding clock sources.

5.9. Components and Interfaces

This section describes the development board's communication ports and interface cards relative to the Arria 10 SoC device. The development board supports the following communication ports:

- PCI Express Gen3 root complex and end point
- 10/100/1000 Ethernet (HPS)
- 10/100/1000 Ethernet (FPGA)
- FMC
- RS-232 UART (HPS)
- Real-Time Clock
- SFP+
- I^2C interface

5.9.1. PCI Express

The PCIe RC interface on the development board supports auto-negotiating channel width from x1 to x8 as well as the connection speed of Gen3 at 8 Gbps/lane.

The PCI express end point interface is connected to the FMCB slot. A special PCIE-FMC cable (HDR-181157-01-PCIEC) made by SAMTEC must be plugged into the FMCB slot for the PCIe EP application.

Note: You can order the PCIE-FMC cable by contacting SAMTEC directly.

For the PCIe RC application, the PCIE_REFCLK_P/N signal is a 100-MHz differential input that is driven to the daughtercard through the PCIe edge connector. This signal connects directly to a Arria 10 SoC REFCLK input pin pair using DC coupling. The I/O standard is High-Speed Current Steering Logic (HCSL).

Figure 25. PCI Express Reference Clock Levels

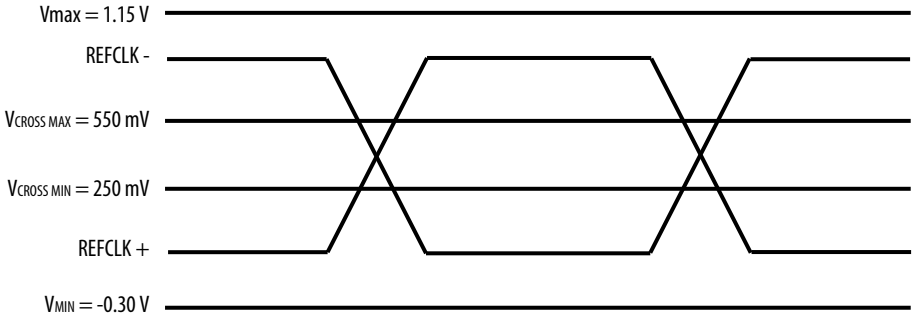

The PCI Express edge connector also has a presence detect feature for the motherboard to determine if a card is installed.

Table 29. PCI Express FPGA Pin Assignments

Arria 10 SoC Pin Name	Schematic Signal Name	Direction	Description
Y38	PCIE_TX_N7	Output	PCIe RC Channel 7 Transmitter
Y39	PCIE_TX_P7	Output	PCIe RC Channel 7 Transmitter
Y34	PCIE_RX_N7	Input	PCIe RC Channel 7 Receiver
Y35	PCIE_RX_P7	Input	PCIe RC Channel 7 Receiver
AA36	PCIE_TX_N6	Output	PCIe RC Channel 6 Transmitter
AA37	PCIE_TX_P6	Output	PCIe RC Channel 6 Transmitter
AA32	PCIE_RX_N6	Input	PCIe RC Channel 6 Receiver
AA33	PCIE_RX_P6	Input	PCIe RC Channel 6 Receiver
AB38	PCIE_TX_N5	Output	PCIe RC Channel 5 Transmitter
AB39	PCIE_TX_P5	Output	PCIe RC Channel 5 Transmitter
AB34	PCIE_RX_N5	Input	PCIe RC Channel 5 Receiver
AB35	PCIE_RX_P5	Input	PCIe RC Channel 5 Receiver
AC36	PCIE_TX_N4	Output	PCIe RC Channel 4 Transmitter
AC37	PCIE_TX_P4	Output	PCIe RC Channel 4 Transmitter
AB30	PCIE_RX_N4	Input	PCIe RC Channel 4 Receiver
AB31	PCIE_RX_P4	Input	PCIe RC Channel 4 Receiver
AD38	PCIE_TX_N3	Output	PCIe RC Channel 3 Transmitter
AD39	PCIE_TX_P3	Output	PCIe RC Channel 3 Transmitter
AC32	PCIE_RX_N3	Input	PCIe RC Channel 3 Receiver
AC33	PCIE_RX_P3	Input	PCIe RC Channel 3 Receiver
AE36	PCIE_TX_N2	Output	PCIe RC Channel 2 Transmitter
AE37	PCIE_TX_P2	Output	PCIe RC Channel 2 Transmitter
AD34	PCIE_RX_N2	Input	PCIe RC Channel 2 Receiver
AD35	PCIE_RX_P2	Input	PCIe RC Channel 2 Receiver
AE28	-	Input	Pull down to Ground, no use
AE29	-	Input	Pull down to Ground, no use

Related Information

www.Samtec.com

5.9.2. 10/100/1000 Ethernet (HPS)

The development board supports an RJ-45 (HPS_P3) 10/100/1000 base-T Ethernet using an external Micrel KSZ9031RN PHY and the HPS EMAC function. The PHY-to-MAC interface employs RGMII connection using four data lines at 250 Mbps each for a connection speed of 1 Gbps.

The PHY interfaces to an RJ-45 model with internal magnetics that can be used for driving copper lines with Ethernet traffic.

Figure 26. RGMII Interface between HPS (MAC) and PHY

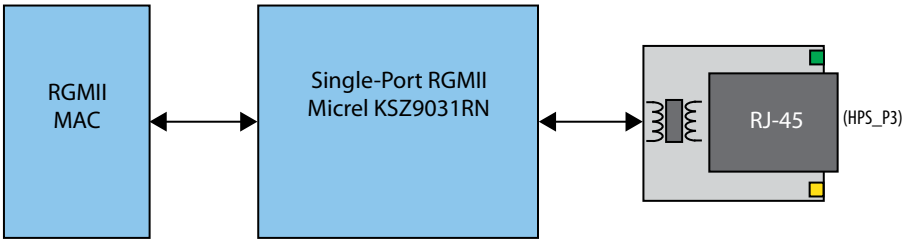

Table 30. Ethernet (HPS) Pin Assignments

FPGA Pin Number	Shared I/O Bit	Schematic Signal Name	Description
H18	GPIO0_IO12	ENET_HPS_GTX_CLK	EMAC0 RGMII TX Clock
H19	GPIO0_IO13	ENET_HPS_TX_EN	EMAC0 RGMII enable
F18	GPIO0_IO14	ENET_HPS_RX_CLK	EMAC0 RGMII RX Clock
G17	GPIO0_IO15	ENET_HPS_RX_DV	EMAC0 RGMII RX DV flag
E20	GPIO0_IO16	ENET_HPS_TXD0	EMAC0 RGMII TXD0
F20	GPIO0_IO17	ENET_HPS_TXD1	EMAC0 RGMII TXD1
G20	GPIO0_IO18	ENET_HPS_RXD0	EMAC0 RGMII RXD0
G21	GPIO0_IO19	ENET_HPS_RXD1	EMAC0 RGMII RXD1
F19	GPIO0_IO20	ENET_HPS_TXD2	EMAC0 RGMII TXD2
G19	GPIO0_IO21	ENET_HPS_TXD3	EMAC0 RGMII TXD3
F22	GPIO0_IO22	ENET_HPS_RXD2	EMAC0 RGMII RXD2
G22	GPIO0_IO23	ENET_HPS_RXD3	EMAC0 RGMII RXD3
H23	GPIO1_IO8	ENETB_MDIO	EMAC2 MDIO
J23	GPIO1_IO9	ENETB_MDC	EMAC2 MDIO
K21	GPIO1_IO10	ENET_HPS_MDIO	EMAC2 MDIO
K20	GPIO1_IO11	ENET_HPS_MDC	EMAC2 MDIO

The Micrel KSZ9031RN PHY uses a multi-level POR bootstrap encoding scheme to allow a small set of I/O pins (7) to set up a very large number of default settings within the device. The related I/O pins have integrated pull-up or pull-down resistors to configure the device.

Table 31. Ethernet PHY (HPS) Bootstrap Encoding Scheme

Board Reference (U12)	Schematic Signal Name	Description	Strapping Option
17	ENET_HPS_LED1_LINK	PHY address bit 0	Pulled high
15	ENET_HPS_LED2_LINK	PHY address bit 1	Pulled high
32	ENET_HPS_RXD0	Mode 0	Pulled high
31	ENET_HPS_RXD1	Mode 1	Pulled high
28	ENET_HPS_RXD2	Mode 2	Pulled high
27	ENET_HPS_RXD3	Mode 3	Pulled high
35	ENET_HPS_RX_CLK	PHY address bit 2	Pulled high
33	ENET_HPS_RX_DV	Clock enable	Pulled low
41	CLK125_NDO_LED_MODE	Single LED mode	Pulled high

5.9.3. 10/100/1000 Ethernet (FPGA)

The development board supports two RJ45 10/100/1000 base-T Ethernet using Marvell 88E1111. SGMII AC coupling interface is used between PHY and FPGA transceiver.

Figure 27. MII Interface between FPGA (MAC) and PHY

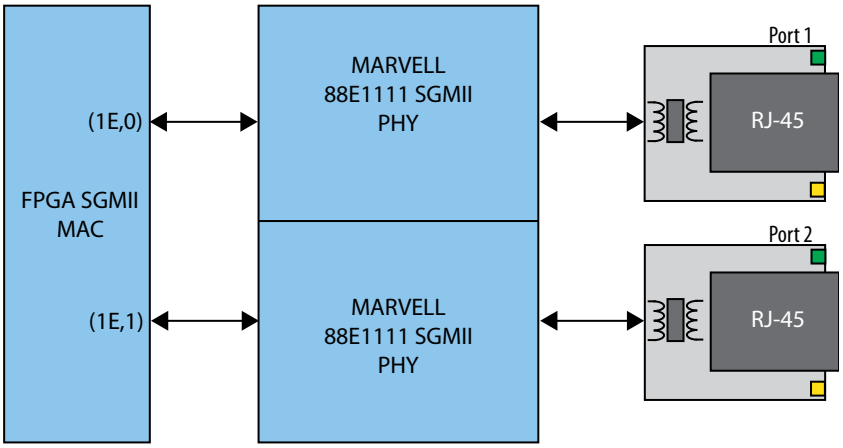

Table 32. Ethernet (FPGA) Pin Assignments

FPGA Pin Assignment	Schematic Signal Name	Direction	Description
AK38	ENETA_TX_N	Output	Ethernet Port A Transmitter
AK39	ENETA_TX_P	Output	Ethernet Port A Transmitter
AG32	ENETA_RX_N	Input	Ethernet Port A Receiver
AG33	ENETA_RX_P	Input	Ethernet Port A Receiver
AL36	ENETB_TX_N	Output	Ethernet Port B Transmitter
AL37	ENETB_TX_P	Output	Ethernet Port B Transmitter
AH34	ENETB_RX_N	Input	Ethernet Port B Receiver
AH35	ENETB_RX_P	Input	Ethernet Port B Receiver
AG29	CLK_ENET_FPGA_P	Input	125MHz Reference clock from Clock Synthesizer
AG28	CLK_ENET_FPGA_N	Input	125MHz Reference clock from Clock Synthesizer

5.9.4. FMC

The FMCA slot is compliant with the V57.1 spec. All FMC V57.1 1.8V daughtercards can be plugged into the FMCA slot. The FMCB slot is designed based on the Altera 16-transceiver FMCB specification.

Note: Check the signal connections if your FMC card must be put in the FMCB slot.

Table 33. FMC Port A Transceiver Pin Assignments

FPGA Pin Assignment	Schematic Signal Name	Direction	Description
E36	FAD9C2MN	Output	FMCA Slot Channel 9 transmitter
E37	FAD9C2MP	Output	FMCA Slot Channel 9 transmitter
K30	FAD9M2CN	Input	FMCA Slot Channel 9 receiver
K31	FAD9M2CP	Input	FMCA Slot Channel 9 receiver
F34	FAD8C2MN	Output	FMCA Slot Channel 8 transmitter
F35	FAD8C2MP	Output	FMCA Slot Channel 8 transmitter
K34	FAD8M2CN	Input	FMCA Slot Channel 8 receiver
K35	FAD8M2CP	Input	FMCA Slot Channel 8 receiver
F38	FAD7C2MN	Output	FMCA Slot Channel 7 transmitter
F39	FAD7C2MP	Output	FMCA Slot Channel 7 transmitter
L32	FAD7M2CN	Input	FMCA Slot Channel 7 receiver
L33	FAD7M2CP	Input	FMCA Slot Channel 7 receiver
G36	FAD6C2MN	Output	FMCA Slot Channel 6 transmitter
G37	FAD6C2MP	Output	FMCA Slot Channel 6 transmitter
M30	FAD6M2CN	Input	FMCA Slot Channel 6 receiver
M31	FAD6M2CP	Input	FMCA Slot Channel 6 receiver
L29	LMK_FMCCLK_P	input	FMCA reference clock from Clock cleaner
L28	LMK_FMCCLK_N	input	FMCA reference clock from Clock cleaner
N29	FAGBTCLK0M2CP	input	FMCA SLOT reference Clock 0

continued...

FPGA Pin Assignment	Schematic Signal Name	Direction	Description
N28	FAGBTCLK0M2CN	input	FMCA SLOT reference Clock 0
H38	FAD5C2MN	Output	FMCA Slot Channel 5 transmitter
H39	FAD5C2MP	Output	FMCA Slot Channel 5 transmitter
M34	FAD5M2CN	Input	FMCA Slot Channel 5 receiver
M35	FAD5M2CP	Input	FMCA Slot Channel 5 receiver
J36	FAD4C2MN	Output	FMCA Slot Channel 4 transmitter
J37	FAD4C2MP	Output	FMCA Slot Channel 4 transmitter
N32	FAD4M2CN	Input	FMCA Slot Channel 4 receiver
N33	FAD4M2CP	Input	FMCA Slot Channel 4 receiver
K38	FAD3C2MN	Output	FMCA Slot Channel 3 transmitter
K39	FAD3C2MP	Output	FMCA Slot Channel 3 transmitter
P30	FAD3M2CN	Input	FMCA Slot Channel 3 receiver
P31	FAD3M2CP	Input	FMCA Slot Channel 3 receiver
L36	FAD2C2MN	Output	FMCA Slot Channel 2 transmitter
L37	FAD2C2MP	Output	FMCA Slot Channel 2 transmitter
P34	FAD2M2CN	Input	FMCA Slot Channel 2 receiver
P35	FAD2M2CP	Input	FMCA Slot Channel 2 receiver
M38	FAD1C2MN	Output	FMCA Slot Channel 1 transmitter
M39	FAD1C2MP	Output	FMCA Slot Channel 1 transmitter
R32	FAD1M2CN	Input	FMCA Slot Channel 1 receiver
R33	FAD1M2CP	Input	FMCA Slot Channel 1 receiver
N36	FAD0C2MN	Output	FMCA Slot Channel 0 transmitter
N37	FAD0C2MP	Output	FMCA Slot Channel 0 transmitter

continued...

FPGA Pin Assignment	Schematic Signal Name	Direction	Description
T30	FAD0M2CN	Input	FMCA Slot Channel 0 receiver
T31	FAD0M2CP	Input	FMCA Slot Channel 0 receiver
R29	FAGBTCLK1M2CP	input	FMCA SLOT reference Clock 1
R28	FAGBTCLK1M2CN	input	FMCA SLOT reference Clock 1

Table 34. FMC Port B Transceiver Pin Assignments

FPGA Pin Assignment	Schematic Signal Name	Direction	Description
U29	REFCLK1_FMCB_P	input	FMCB Reference Clock 1 from Clock synthesizer
U28	REFCLK1_FMCB_N	input	FMCB Reference Clock 1 from Clock synthesizer
P38	FBD15C2MN	Output	FMCB Slot Channel 15 transmitter
P39	FBD15C2MP	Output	FMCB Slot Channel 15 transmitter
T34	FBD15M2CN	Input	FMCB Slot Channel 15 receiver
T35	FBD15M2CP	Input	FMCB Slot Channel 15 receiver
R36	FBD14C2MN	Output	FMCB Slot Channel 14 transmitter
R37	FBD14C2MP	Output	FMCB Slot Channel 14 transmitter
U32	FBD14M2CN	Input	FMCB Slot Channel 14 receiver
U33	FBD14M2CP	Input	FMCB Slot Channel 14 receiver
T38	FBD13C2MN	Output	FMCB Slot Channel 13 transmitter
T39	FBD13C2MP	Output	FMCB Slot Channel 13 transmitter
V30	FBD13M2CN	Input	FMCB Slot Channel 13 receiver
V31	FBD13M2CP	Input	FMCB Slot Channel 13 receiver
U36	FBD12C2MN	Output	FMCB Slot Channel 12 transmitter
U37	FBD12C2MP	Output	FMCB Slot Channel 12 transmitter
V34	FBD12M2CN	Input	FMCB Slot Channel 12 receiver
V35	FBD12M2CP	Input	FMCB Slot Channel 12 receiver

continued...

FPGA Pin Assignment	Schematic Signal Name	Direction	Description
V38	FBD11C2MN	Output	FMCB Slot Channel 11 transmitter
V39	FBD11C2MP	Output	FMCB Slot Channel 11 transmitter
W32	FBD11M2CN	Input	FMCB Slot Channel 11 receiver
W33	FBD11M2CP	Input	FMCB Slot Channel 11 receiver
W36	FBD10C2MN	Output	FMCB Slot Channel 10 transmitter
W37	FBD10C2MP	Output	FMCB Slot Channel 10 transmitter
Y30	FBD10M2CN	Input	FMCB Slot Channel 10 receiver
Y31	FBD10M2CP	Input	FMCB Slot Channel 10 receiver
W29	FBGBTCLK1M2CP	input	Reference Clock from FMCB slot channel 1
W28	FBGBTCLK1M2CN	input	Reference Clock from FMCB slot channel 1
AM38	FBD7C2MN	Output	FMCB Slot Channel 7 transmitter or PCIE EP Channel 7 transmitter
AM39	FBD7C2MP	Output	FMCB Slot Channel 7 transmitter or PCIE EP Channel 7 transmitter
AH30	FBD7M2CN	Input	FMCB Slot Channel 7 receiver or PCIE EP Channel 7 receiver
AH31	FBD7M2CP	Input	FMCB Slot Channel 7 receiver or PCIE EP Channel 7 receiver
AN36	FBD6C2MN	Output	FMCB Slot Channel 6 transmitter or PCIE EP Channel 6 transmitter
AN37	FBD6C2MP	Output	FMCB Slot Channel 6 transmitter or PCIE EP Channel 6 transmitter
AJ32	FBD6M2CN	Input	FMCB Slot Channel 6 receiver or PCIE EP Channel 6 receiver
AJ33	FBD6M2CP	Input	FMCB Slot Channel 6 receiver or PCIE EP Channel 6 receiver
AP38	FBD5C2MN	Output	FMCB Slot Channel 5 transmitter or PCIE EP Channel 5 transmitter
AP39	FBD5C2MP	Output	FMCB Slot Channel 5 transmitter or PCIE EP Channel 5 transmitter

continued...

FPGA Pin Assignment	Schematic Signal Name	Direction	Description
AK34	FBD5M2CN	Input	FMCB Slot Channel 5 receiver or PCIE EP Channel 5 receiver
AK35	FBD5M2CP	Input	FMCB Slot Channel 5 receiver or PCIE EP Channel 5 receiver
AP34	FBD4C2MN	Output	FMCB Slot Channel 4 transmitter or PCIE EP Channel 4 transmitter
AP35	FBD4C2MP	Output	FMCB Slot Channel 4 transmitter or PCIE EP Channel 4 transmitter
AK30	FBD4M2CN	Input	FMCB Slot Channel 4 receiver or PCIE EP Channel 4 receiver
AK31	FBD4M2CP	Input	FMCB Slot Channel 4 receiver or PCIE EP Channel 4 receiver
AR36	FBD3C2MN	Output	FMCB Slot Channel 3 transmitter or PCIE EP Channel 3 transmitter
AR37	FBD3C2MP	Output	FMCB Slot Channel 3 transmitter or PCIE EP Channel 3 transmitter
AL32	FBD3M2CN	Input	FMCB Slot Channel 3 receiver or PCIE EP Channel 3 receiver
AL33	FBD3M2CP	Input	FMCB Slot Channel 3 receiver or PCIE EP Channel 3 receiver
AT38	FBD2C2MN	Output	FMCB Slot Channel 2 transmitter or PCIE EP Channel 2 transmitter
AT39	FBD2C2MP	Output	FMCB Slot Channel 2 transmitter or PCIE EP Channel 2 transmitter
AM34	FBD2M2CN	Input	FMCB Slot Channel 2 receiver or PCIE EP Channel 2 receiver
AM35	FBD2M2CP	Input	FMCB Slot Channel 2 receiver or PCIE EP Channel 2 receiver
AL29	REFCLK0_FMCB_P	Input	FMCB Reference Clock 0 from Clock synthesizer
AL28	REFCLK0_FMCB_N	Input	FMCB Reference Clock 0 from Clock synthesizer
AN29	FBGBTCLK0M2CP	Input	FMCB slot reference clock channel 0 or PCIE EP reference clock
AN28	FBGBTCLK0M2CN	Input	FMCB slot reference clock channel 0 or PCIE EP reference clock

continued...

FPGA Pin Assignment	Schematic Signal Name	Direction	Description
AT34	FBD1C2MN	Output	FMCB Slot Channel 1 transmitter or PCIE EP Channel 1 transmitter
AT35	FBD1C2MP	Output	FMCB Slot Channel 1 transmitter or PCIE EP Channel 1 transmitter
AM30	FBD1M2CN	Input	FMCB Slot Channel 1 receiver or PCIE EP Channel 1 receiver
AM31	FBD1M2CP	Input	FMCB Slot Channel 1 receiver or PCIE EP Channel 1 receiver
AU36	FBD0C2MN	Output	FMCB Slot Channel 0 transmitter or PCIE EP Channel 0 transmitter
AU37	FBD0C2MP	Output	FMCB Slot Channel 0 transmitter or PCIE EP Channel 0 transmitter
AN32	FBD0M2CN	Input	FMCB Slot Channel 0 receiver or PCIE EP Channel 0 receiver
AN33	FBD0M2CP	Input	FMCB Slot Channel 0 receiver or PCIE EP Channel 0 receiver
AV38	FBD9C2MN	Output	FMCB Slot Channel 9 transmitter
AV39	FBD9C2MP	Output	FMCB Slot Channel 9 transmitter
AP30	FBD9M2CN	Input	FMCB Slot Channel 9 receiver
AP31	FBD9M2CP	Input	FMCB Slot Channel 9 receiver
AV34	FBD8C2MN	Output	FMCB Slot Channel 8 transmitter
AV35	FBD8C2MP	Output	FMCB Slot Channel 8 transmitter
AR32	FBD8M2CN	Input	FMCB Slot Channel 8 receiver
AR33	FBD2M2CP	Input	FMCB Slot Channel 8 receiver

The FMCA slot is designed to be compatible with the requirements of FMC V57.1. This slot can be used to support an external FMC memory card (DDR3 or DDR4).

Table 35. FMCA LVDS Signal I/O Assignment

BANK	Pin Number	Schematic Signal Name	DDR3 Interface (optional)	DDR4 Interface (optional)
3H	P15	FAHAN0	DDR3 DQ4	DDR4 DQ4
3H	P14	FAHAP0	DDR3 DM0	DDR4 LDM_n0
3H	N14	FAHAN1	DDR3 DQ5	DDR4 DQ5

continued...

BANK	Pin Number	Schematic Signal Name	DDR3 Interface (optional)	DDR4 Interface (optional)
3H	M14	FAHAP1	DDR3 DQ6	DDR4 DQ6
3H	J14	FAHAN2	DDR3 DQ1	DDR4 DQ1
3H	J13	FAHAP2	DDR3 DQ0	DDR4 DQ0
3H	L15	FAHAN3	DDR3 DQS 0n	DDR4 DQSL_n0
3H	L14	FAHAP3	DDR3 DQS 0p	DDR4 DQSL_p0
3H	L13	FAHAN4	DDR3 DQ2	DDR4 DQ2
3H	L12	FAHAP4	DDR3 DQ3	DDR4 DQ3
3H	K13	FAHAN5	DDR3 DQ7	DDR4 DQ7
3H	K12	FAHAP5	---	---
3H	H14	FALAN0	DDR3 DQ9	DDR4 DQ9
3H	G14	FALAP0	DDR3 DQ8	DDR4 DQ8
3H	D14	FALAN3	DDR3 DQ11	DDR4 DQ11
3H	C14	FALAP3	DDR3 DQ10	DDR4 DQ10
3H	D13	FALAN2	DDR3 DQ14	DDR4 DQ14
3H	C13	FALAP2	DDR3 DQ12	DDR4 DQ12
3H	E13	FA_LA_DEVCLK_N	DDR3 DQS1n	DDR4 DQSU0n
3H	E12	FA_LA_DEVCLK_P	DDQ3 DQS1p	DDQ4 DQSU0p
3H	H13	FALAN4	DDR3 DQ13	DDQ4 DQ13
3H	H12	FALAP4	240-Ohm reference resistor	240-Ohm reference resistor
3H	F14	FA_LA_SYSREF_N	DDR3 DQ15	DDR4 DQ15
3H	F13	FA_LA_SYSREF_P	DDR3 DM1	DDR4 UDM_n0
3H	C12	FAHAN6	DDR3 DQ20	DDR4 DQ20
3H	C11	FAHAP6	DDR3 DQ22	DDR4 DQ22
3H	E11	FAHAN7	DDR3 DQ17	DDR4 DQ17
3H	D11	FAHAP7	DDR3 DQ18	DDR4 DQ18
3H	G12	FAHAN8	DDR3 DQ19	DDR4 DQ19
3H	F12	FAHAP8	DDR3 DQ16	DDR4 DQ16
3H	G10	FAHAN9	DDR3 DQSn2	DDR4 DQSL1n
3H	F10	FAHAP9	DDR3 DQSp2	DDR4 DQSl1p
3H	E10	FAHAN10	DDR3 DM2	DDR4 LDM_n1
3H	D10	FAHAP10	DDR3 DQ21	DDR4 DQ21
3H	H11	FAHAN11	DDR3DQ23	DDR4DQ23
3H	G11	FAHAP11		
3H	B10	FALAN6	DDR3 DMA3	DDR4 UDM_n1
3H	A10	FALAP6	DDR3 DQ31	DDR4 DQ31
3H	B9	FALAN7	DDR3 DQ30	DDR4 DQ30

continued...

BANK	Pin Number	Schematic Signal Name	DDR3 Interface (optional)	DDR4 Interface (optional)
3H	A9	FALAP7		
3H	B12	FALAN8	DDR3 DQ29	DDR4 DQ29
3H	B11	FALAP8	DDR3 DQ28	DDR4 DQ28
3H	A13	FALAN9	DDR3 DQSn3	DDR4 DQSU1n
3H	A12	FALAP9	DDR3 DQSp3	DDR4 DQSU1p
3H	A8	FALAN10	DDR3 DQ25	DDR4 DQ25
3H	A7	FALAP10	DDR3 DQ26	DDR4 DQ26
3H	D9	FALAN11	DDR3 DQ24	DDR4 DQ24
3H	C9	FALAP11	DDR3 DQ27	DDR4 DQ27
3G	F8	FAHAN12	DQ of DDR3 Byte 8	DQ of DDR4 Byte 8
3G	E8	FAHAP12	DQ of DDR3 Byte 8	DQ of DDR4 Byte 8
3G	C7	FAHAN13	DM of DDR3 Byte 8	DM of DDR4 Byte 8
3G	B7	FAHAP13	DQ of DDR3 Byte 8	DQ of DDR4 Byte 8
3G	D8	FAHAN14	DQ of DDR3 Byte 8	DQ of DDR4 Byte 8
3G	C8	FAHAP14	DQ of DDR3 Byte 8	DQ of DDR4 Byte 8
3G	C6	FAHAN15	DQS of DDR3 byte 8	DQS of DDR4 byte 8
3G	B6	FAHAP15	DQS of DDR3 byte 8	DQS of DDR4 byte 8
3G	B5	FAHAN16	DQ of DDR3 Byte 8	DQ of DDR4 Byte 8
3G	A5	FAHAP16	DQ of DDR3 Byte 8	DQ of DDR4 Byte 8
3G	B4	FAHAN17	DQ of DDR3 Byte 8	DQ of DDR4 Byte 8
3G	A4	FAHAP17	No use	DDR4 Alertn
3G	C4	FALAN20	BA2 of DDR3 Bank Address line	BG0 of DDR4 Group line
3G	C3	FALAP20	BA1 of DDR3 Bank address line	BA1 of DDR4 BANK address line
3G	D3	FALAN21	BA0 of DDR3 BANK address line	BA0 of DDR4 BANK address line
3G	C2	FALAP21	CASn of DDR3 Control line	A17 of DDR4 address line
3G	F7	FAHAN22	RASn of DDR3 Control line	A16 of DDR4 address line
3G	E7	FAHAP22	A15 of DDR3 Address line	A15 of DDR4 Address line
3G	D5	FALAN15	A14 of DDR3 Address line	A14 of DDR4 Address line
3G	D4	FALAP15	A13 of DDR3 Address line	A13 of DDR4 Address line
3G	E6	FALAN16	A12 of DDR3 Address line	A12 of DDR4 Address line
3G	D6	FALAP16	240-Ohm reference resistor	240-Ohm reference resistor
3G	F5	FA_EMI_CLKN	133Mhz DDR reference clock	133Mhz DDR reference clock
3G	E5	FA_EMI_CLKP	133Mhz DDR reference clock	133Mhz DDR reference clock
3G	H9	FAHAN19	A11 of DDR3 Address line	A11 of DDR4 Address line
3G	H8	FAHAP19	A10 of DDR3 Address line	A10 of DDR4 Address line
3G	G9	FALAN17	A9 of DDR3 Address line	A9 of DDR4 Address line

continued...

BANK	Pin Number	Schematic Signal Name	DDR3 Interface (optional)	DDR4 Interface (optional)
3G	F9	FALAP17	A8 of DDR3 Address line	A8 of DDR4 Address line
3G	K8	FPGA_RCLK_3Gn	A7 of DDR3 Address line	A7 of DDR4 Address line
3G	J8	FPGA_RCLK_3Gp	A6 of DDR3 Address line	A6 of DDR4 Address line
3G	G6	FALAN19	A5 of DDR3 Address line	A5 of DDR4 Address line
3G	G5	FALAP19	A4 of DDR3 Address line	A4 of DDR4 Address line
3G	H7	FALAN18	A3 of DDR3 Address line	A3 of DDR4 Address line
3G	G7	FALAP18	A2 ofDDR3 Address line	A2 ofDDR4 Address line
3G	J6	FAHAN23	A1 of DDR3 Address line	A1 of DDR4 Address line
3G	H6	FAHAP23	A0 of DDR3 Address line	A0 of DDR4 Address line
3G	L10	FAHAN20	No use	DDR4 PAR
3G	K10	FAHAP20	No use	CSN1 of DDR4 control line
3G	K11	FAHAN13	DDR3 interface clock	DDR4 interface clock
3G	J11	FAHAP13	DDR3 interface clock	DDR4 interface clock
3G	N13	FALAN12	DDR3 ClKe1	DDR4 CKe1
3G	M12	FALAP12	DDR3 CKe0	DDR4 CKe0
3G	N11	FAHAN21	DDR3 ODT1	DDR4 ODT1
3G	M10	FAHAP21	DDR3 ODT0	DDR4 ODT0
3G	J10	FALAN14	DDR3 CSn1	DDR4 ACTn
3G	J9	FALAP14	DDR3 CSn0	DDR4 CSn0
3G	N12	FAHAN18	DDR3 Resetn	DDR4 Resetn
3G	M11	FAHAP18	DDR3 Wen	DDR4 BG1
3F	G4	FALAN22	DDR3 DQ4	DDR4 DQ4
3F	F4	FALAP22	DDR3 DM0	DDR4 LDM_n0
3F	D1	FALAN23	DDR3 DQ5	DDR4 DQ5
3F	C1	FALAP23	DDR3 DQ6	DDR4 DQ6
3F	E2	FALAN24	DDR3 DQ1	DDR4 DQ1
3F	E1	FALAP24	DDR3 DQ0	DDR4 DQ0
3F	F3	FALAN25	DDR3 DQS 0n	DDR4 DQSL_n0
3F	E3	FALAP25	DDR3 DQS 0p	DDR4 DQSL_p0
3F	G2	FALAN26	DDR3 DQ2	DDR4 DQ2
3F	F2	FALAP26	DDR3 DQ3	DDR4 DQ3
3F	H2	FALAN27	DDR3 DQ7	DDR4 DQ7
3F	G1	FALAP27		
3F	J5	FAHBN0	DDR3 DQ9	DDR4 DQ9
3F	J4	FAHBP0	DDR3 DQ8	DDR4 DQ8
3F	J1	FAHBN1	DDR3 DQ11	DDR4 DQ11

continued...

BANK	Pin Number	Schematic Signal Name	DDR3 Interface (optional)	DDR4 Interface (optional)
3F	H1	FAHBP1	DDR3 DQ10	DDR4 DQ10
3F	H4	FAHBN2	DDR3 DQ14	DDR4 DQ14
3F	H3	FAHBP2	DDR3 DQ12	DDR4 DQ12
3F	K2	FAHBN3	DDR3 DQS1n	DDR4 DQSU0n
3F	K1	FAHBP3	DDQ3 DQS1p	DDQ4 DQSU0p
3F	L3	FAHBN4	DDR3 DQ13	DDQ4 DQ13
3F	L2	FAHBP4	240-Ohm reference resistor	240-Ohm reference resistor
3F	K3	FAHBN5	DDR3 DQ15	DDR4 DQ15
3F	J3	FAHBP5	DDR3 DM1	DDR4 UDM_n0
3F	N7	FAHBN6	DDR3 DQ20	DDR4 DQ20
3F	N6	FAHBP6	DDR3 DQ22	DDR4 DQ22
3F	K6	FAHBN7	DDR3 DQ17	DDR4 DQ17
3F	K5	FAHBP7	DDR3 DQ18	DDR4 DQ18
3F	L7	FAHBN8	DDR3 DQ19	DDR4 DQ19
3F	K7	FAHBP8	DDR3 DQ16	DDR4 DQ16
3F	M7	FAHBN9	DDR3 DQSn2	DDR4 DQSL1n
3F	M6	FAHBP9	DDR3 DQSp2	DDR4 DQSl1p
3F	M4	FAHBN10	DDR3 DM2	DDR4 LDM_n1
3F	L4	FAHBP10	DDR3 DQ21	DDR4 DQ21
3F	M5	FALAN28	DDR3DQ23	DDR4DQ23
3F	L5	FALAP28		
3F	P10	FALAN29	DDR3 DMA3	DDR4 UDM_n1
3F	N9	FALAP29	DDR3 DQ31	DDR4 DQ31
3F	M9	FAHBN13	DDR3 DQ30	DDR4 DQ30
3F	N8	FAHBP13		
3F	R10	FALAN30	DDR3 DQ29	DDR4 DQ29
3F	P9	FALAP30	DDR3 DQ28	DDR4 DQ28
3F	R8	FALAN31	DDR3 DQSn3	DDR4 DQSU1n
3F	P8	FALAP31	DDR3 DQSp3	DDR4 DQSU1p
3F	R11	FALAN33	DDR3 DQ25	DDR4 DQ25
3F	P11	FALAP33	DDR3 DQ26	DDR4 DQ26
3F	L9	FALAN32	DDR3 DQ24	DDR4 DQ24
3F	L8	FALAP32	DDR3 DQ27	DDR4 DQ27

Table 36. FMCB LVDS signal IO assignment

BANK	Pin Number	Schematic Signal Name
3E	U7	FBHA_N6
3E	T7	FBHA_P6
3E	U6	FPGA_Refsys_3En
3E	U5	FPGA_Refsys_3Ep
3E	V7	FBHA_P17
3E	V6	FBHA_N17
3E	W6	Refclk_3En
3E	W5	Refclk_3Ep
3E	U4	FBLAN20
3E	T4	FBLAP20
3E	T3	FBLAN21
3E	T2	FBLAP21
3E	U2	FBLAN22
3E	U1	FBLAP22
3E	V2	FBLAN23
3E	V1	FBLAP23
3E	W4	FBLAN24
3E	W3	FBLAP24
3E	V4	FBLAN25
3E	V3	FBLAP25
3E	U10	FBLAN26
3E	U9	FBLAP26
3E	V9	FBLAN27
3E	V8	FBLAP27
3E	T9	FBHA_N23
3E	T8	FBHA_P23
3E	W10	FBHA_N20
3E	W9	FBHA_P20
3E	V11	FBHA_N21
3E	U11	FBHA_P21
3E	R7	FBHA_N22
3E	R6	FBHA_P22
3A	AU7	FBLAN0
3A	AV7	FBLAP0
3A	AT8	FB_LA_DEVCLK_N

continued...

BANK	Pin Number	Schematic Signal Name
3A	AT7	FB_LA_DEVCLK_P
3A	AT10	FBLAN2
3A	AT9	FBLAP2
3A	AV8	FBLAN3
3A	AW8	FBLAP3
3A	AU9	FBLAN4
3A	AV9	FBLAP4
3A	AW10	FB_LA_SYSREF_N
3A	AW9	FB_LA_SYSREF_P
3A	AP8	FBLAN6
3A	AR8	FBLAP6
3A	AU11	FBLAN7
3A	AU10	FBLAP7
3A	AN9	FBLAN8
3A	AP9	FBLAP8
3A	AP10	FBLAN9
3A	AR10	FBLAP9
3A	AR12	FBLAN10
3A	AT12	FBLAP10
3A	AP11	FBCLK0M2CN
3A	AR11	FBCLK0M2CP
3A	AL10	Refclk_3An
3A	AM10	Refclk_3Ap
3A	AK12	FBLAN11
3A	AK11	FBLAP11
3A	AL12	FBLAN12
3A	AM12	FBLAP12
3A	AM11	FBLAN13
3A	AN11	FBLAP13
3A	AL14	FBLAN14
3A	AL13	FBLAP14
3A	AN13	FBLAN15
3A	AN12	FBLAP15
3A	AJ15	FBLAN16
3A	AK15	FBLAP16
3A	AH13	FBLAN17

continued...

BANK	Pin Number	Schematic Signal Name
3A	AH12	FBLAP17
3A	AJ13	FBLAN18
3A	AK13	FBLAP18
3A	AF14	FBLAN19
3A	AG14	FBLAP19
3A	AH14	FMB_SYNC_AB
3A	AJ14	FMB_SYNC_CD
3A	AF15	FMB_SYNCN
3A	AG15	FMB_SYNCP

5.9.5. HPS Shared I/O

Table 37. HPS Shared I/O

Pin Number	Shared I/O Bit	Schematic Signal Name	Description
D18	GPIO0_IO0	USB_CLK	USB2.0 Clock
E18	GPIO0_IO1	USB_STP	USB2.0 Stop bit
C19	GPIO0_IO2	USB_DIR	USB2.0 direction bit
D19	GPIO0_IO3	USB_DATA0	USB2.0 data line 0
E17	GPIO0_IO4	USB_DATA1	USB2.0 data line 1
F17	GPIO0_IO5	USB_NXT	USB2.0 NXT flag
C17	GPIO0_IO6	USB_DATA2	USB2.0 data line 2
C18	GPIO0_IO7	USB_DATA3	USB2.0 data line 3
D21	GPIO0_IO8	USB_DATA4	USB2.0 data line 4
D20	GPIO0_IO9	USB_DATA5	USB2.0 data line 5
E21	GPIO0_IO10	USB_DATA6	USB2.0 data line 6
E22	GPIO0_IO11	USB_DATA7	USB2.0 data line 7
H18	GPIO0_IO12	ENET_HPS_GTX_CLK	EMAC0 RGMII TX Clock
H19	GPIO0_IO13	ENET_HPS_TX_EN	EMAC0 RGMII
F18	GPIO0_IO14	ENET_HPS_RX_CLK	EMAC0 RGMII RX Clock
G17	GPIO0_IO15	ENET_HPS_RX_DV	EMAC0 RGMII RX DV flag
E20	GPIO0_IO16	ENET_HPS_TXD0	EMAC0 RGMII TXD0
F20	GPIO0_IO17	ENET_HPS_TXD1	EMAC0 RGMII TXD1
G20	GPIO0_IO18	ENET_HPS_RXD0	EMAC0 RGMII RXD0
G21	GPIO0_IO19	ENET_HPS_RXD1	EMAC0 RGMII RXD1
F19	GPIO0_IO20	ENET_HPS_TXD2	EMAC0 RGMII TXD2
G19	GPIO0_IO21	ENET_HPS_TXD3	EMAC0 RGMII TXD3
F22	GPIO0_IO22	ENET_HPS_RXD2	EMAC0 RGMII RXD2
G22	GPIO0_IO23	ENET_HPS_RXD3	EMAC0 RGMII RXD3
K18	GPIO1_IO0	SPIM1_CLK	MAXV IO SPI Clock
L19	GPIO1_IO1	SPIM1_MOSI	MAXV IO SPI Master Output/Slave input
H22	GPIO1_IO2	SPIM1_MISO	MAXV IO SPI Slave Input/Master output
H21	GPIO1_IO3	SPIM1_SS0_N	MAXV IO SPI chip select 0
J21	GPIO1_IO4	SPIM1_SS1_N	MAXV IO SPI Chip Select 1
J20	GPIO1_IO5	A10SH_GPIO0	MAXV_GPIO0
J18	GPIO1_IO6	UARTA_TX	UART port 1 TX
J19	GPIO1_IO7	UARTA_RX	UART PORT 1 RX
H23	GPIO1_IO8	ENETB_MDIO	EMAC2 MDIO

continued...

Pin Number	Shared I/O Bit	Schematic Signal Name	Description
J23	GPIO1_IO9	ENETB_MDC	EMAC2 MDIC
K21	GPIO1_IO10	ENET_HPS_MDIO	EMAC0 MDIO
K20	GPIO1_IO11	ENET_HPS_MDC	EMAC0 MDIC
L20	GPIO1_IO12	SH_SDA	I^2C Port 1 SDA
M20	GPIO1_IO13	SH_SCL	I^2C Port 1 SCL
N20	GPIO1_IO14	A10SH_GPIO1	MAXV_GPIO1
P20	GPIO1_IO15	TRACE_ClK	TRACE Clock
K23	GPIO1_IO16	A10SH_GPIO2	MAXV_GPIO2
L23	GPIO1_IO17	A10SH_GPIO3	MAXV_GPIO3
N23	GPIO1_IO18	ENETA_MDIO	EMAC1 MDIO
N22	GPIO1_IO19	ENETA_MDC	EMAC1 MDIC
K22	GPIO1_IO20	TRACE_D0	TRACE D0
L22	GPIO1_IO21	TRACE_D1	TRACE D1
M22	GPIO1_IO22	TRACE_D2	TRACE D2
M21	GPIO1_IO23	TRACE_D3	TRACE D3

5.9.6. USB 2.0 Port (HPS)

The development supports one USB2.0 interface. The HPS USB interface is connected to a USB3320 PHY that is connected to a micro-USB connector (J4).

Table 38. USB 2.0 FPGA Signal Names and Functions

FPGA Pin Assignment	Shared I/O Bit	Schematic Signal Name	Description
D18	GPIO0_IO0	USB_CLK	USB2.0 Clock
E18	GPIO0_IO1	USB_STP	USB2.0 Stop bit
C19	GPIO0_IO2	USB_DIR	USB2.0 direction bit
D19	GPIO0_IO3	USB_DATA0	USB2.0 data line 0
E17	GPIO0_IO4	USB_DATA1	USB2.0 data line 1
F17	GPIO0_IO5	USB_NXT	USB2.0 NXT flag
C17	GPIO0_IO6	USB_DATA2	USB2.0 data line 2
C18	GPIO0_IO7	USB_DATA3	USB2.0 data line 3
D21	GPIO0_IO8	USB_DATA4	USB2.0 data line 4
D20	GPIO0_IO9	USB_DATA5	USB2.0 data line 5
E21	GPIO0_IO10	USB_DATA6	USB2.0 data line 6
E22	GPIO0_IO11	USB_DATA7	USB2.0 data line 7

5.9.7. RS-232 UART (HPS)

The development board supports two UART interfaces, the HPS debug UART and the FPGA debug UART interface. The HPS debug UART is connected to a mini-USB connector (J10) using a FT232RQ-REEL USB-to-UART bridge. The maximum supported rate for this interface is 1 Mbps. The FPGA debug UART is connected to the DB9 connector (J25) using a MAX3221 UART PHY. Board reference D11 and D12 are the HPS debug UART LEDs that illuminate to indicate TX and RX activity.

Table 39. UART FPGA Signal Names and Functions

FPGA Pin Assignment	Shared I/O Bit	Schematic Signal Name	Description
J18	GPIO1_IO6	UARTA_TX	HPS debug UART port 1 TX
J19	GPIO1_IO7	UARTA_RX	HPS debug UART PORT 1 RX
AV22	-	CVP_CONFDONE	HPS UART0 TX after FPGA configuration
AU21	-	CRCERROR	HPS UART0 RX after FPGA configuration

5.9.8. Real-Time Clock (HPS)

The HPS system has a battery-backed real-time clock (RTC) connected through the I^2C interface. The RTC is implemented using a DS1339 device from Maxim Semiconductor. The device has a built-in power sense circuit that detects power failures and automatically switches to the backup battery supply, maintaining time. The device uses an Energizer 357-303HVZ Lithium coin battery with a nominal voltage of 1.55V.

Note: A battery for the RTC is not shipped with the development kit.

5.9.9. SFP+

The development board include two SFP+ ports that use two transceiver channels from the FPGA. These ports take in serial data from the FPGA and transforms it into optical signals. Both SFP+ ports are active and include the SFP+ cage assembly.

Table 40. SFP+ FPGA Transceiver Pin Assignments

FPGA Pin Assignment	Schematic Signal Name	Direction	Description
AW36	SFPB_TX_N	Output	SFP+ B Transmitter
AW37	SFPB_TX_P	Output	SFP+ B Transmitter
AT30	SFPB_RX_N	Input	SFP+ B Receiver
AT31	SFPB_RX_P	Input	SFP+ B Receiver
AW32	SFPA_TX_N	Output	SFP+ A Transmitter
AW33	SFPA_TX_P	Output	SFP+ A Transmitter
AU32	SFPA_RX_N	Input	SFP+ A Receiver
AU33	SFPA_RX_P	Input	SFP+ A Receiver
AR29	LMK_SFPCLK_P	Input	SFP+ clock reference from clock cleaner
AR28	LMK_SFPCLK_N	Input	SFP+ clock reference from clock cleaner

5.9.10. I²C Interface

There is an I²C buffer connected to I²C port 1. The enable pin of the I²C buffer is controlled by the MAX V `A10I2CEN`. The HPS must set `A10I2CEN` to logic 1 before accessing the I²C devices shown in Table 41 on page 92.

Figure 28. I²C Bus Connection

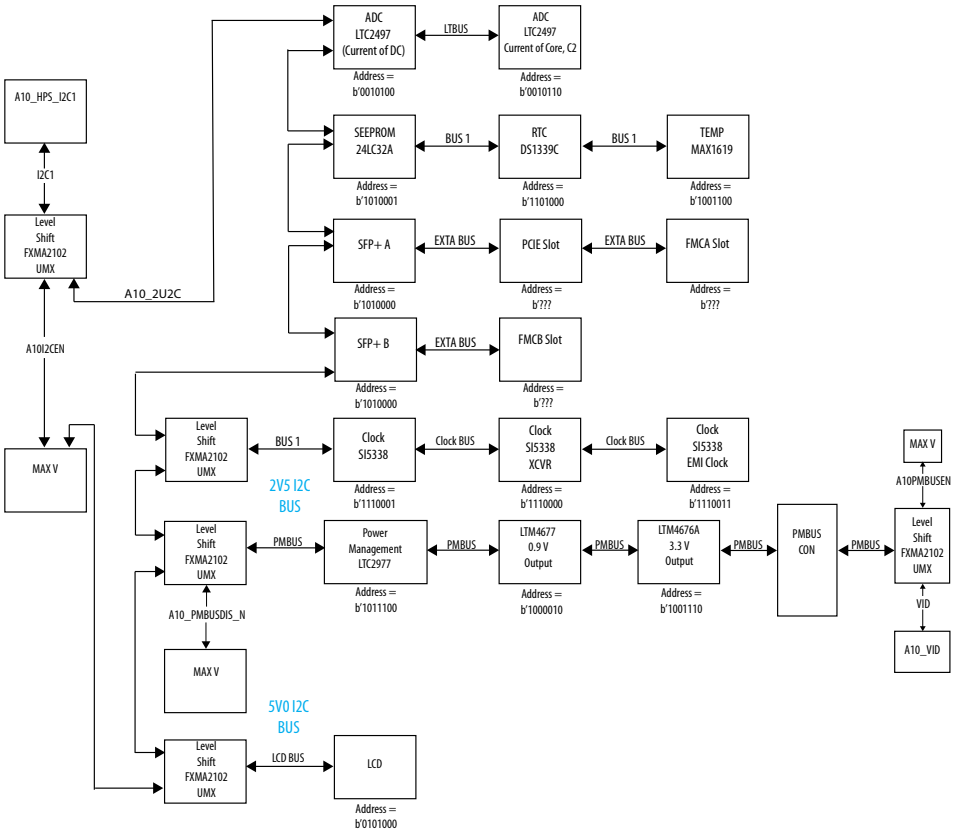

Table 41. I²C Device Address

Address	Device
0x14, 0x16	LT2497 ADC
0x51	24LC32A EEPROM
0x68	DS1339C Real time clock circuit
0x4C	MAX1619 Temp monitor
0x71, 0x70, 0x73	Si5338 clock generators
0x5C	LTC2977 power management
0x42	0.9V LTM4677 power controller
0x0E	3.3VLTM4676A power controller
0x28	LCD

5.9.11. FPGA General I/O Configuration

5.9.11.1. FPGA-I/O MAX V Interface

Thirteen FPGA I/O pairs (FPGAIO_NP signals) are connected to FPGA I/O MAX V CPLD for Ethernet, FPGA User IOs, Display port, and SDI applications support.

Table 42. I/O Assignments of FPGA I/O Pairs

Bank	Pin Number	Schematic Signal Name
3E	M2	FPGAIO9_N
3E	M1	FPGAIO9_P
3E	N4	FPGAIO8_N
3E	N3	FPGAIO8_P
3E	R3	FPGAIO7_N
3E	R2	FPGAIO7_P
3E	N2	FPGAIO6_N
3E	N1	FPGAIO6_P
3E	R1	FPGAIO5_N
3E	P1	FPGAIO5_P
3E	P4	FPGAIO4_N
3E	P3	FPGAIO4_P
3E	P6	FPGAIO3_N
3E	P5	FPGAIO3_P
3E	T5	FPGAIO2_N
3E	R5	FPGAIO2_P
2I	AR22	FPGAIO_N
2I	AR23	FPGAIO_P
2I	AL22	FPGAIO12_N
2I	AM22	FPGAIO12_P
2I	AP21	FPGAIO11_N
2I	AR21	FPGAIO11_P
2I	AN22	FPGAIO10_N
2I	AN21	FPGAIO10_P
2I	AL20	FPGAIO1_N
2I	AM21	FPGAIO1_P

The figure below illustrates the signal connections between two MAX Vs and FPGA.

Figure 29. Control Signals Connection

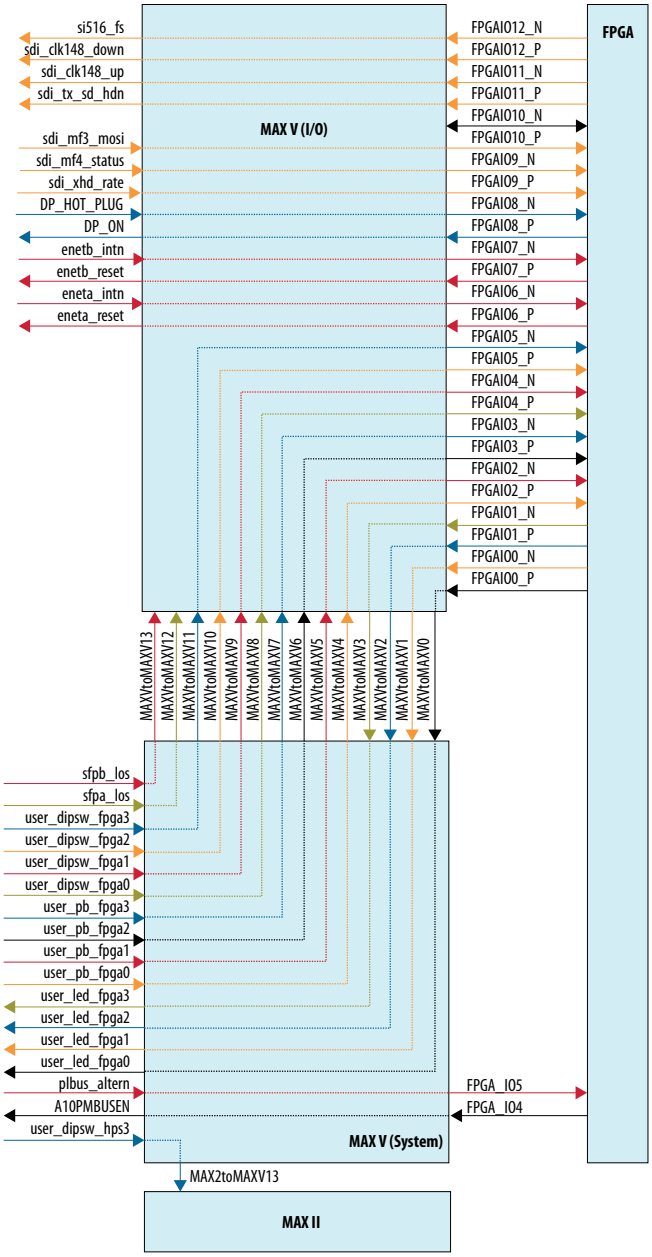

5.9.11.2. LMK04828 Controller

The TI interface uses the USB interface to access the LMK04828 clock cleaner. The LMK04828 controller passes the FT245RQ signals to the SPI interface of LMK04828 clock cleaner chip.

Figure 30. LMK04828 Controller

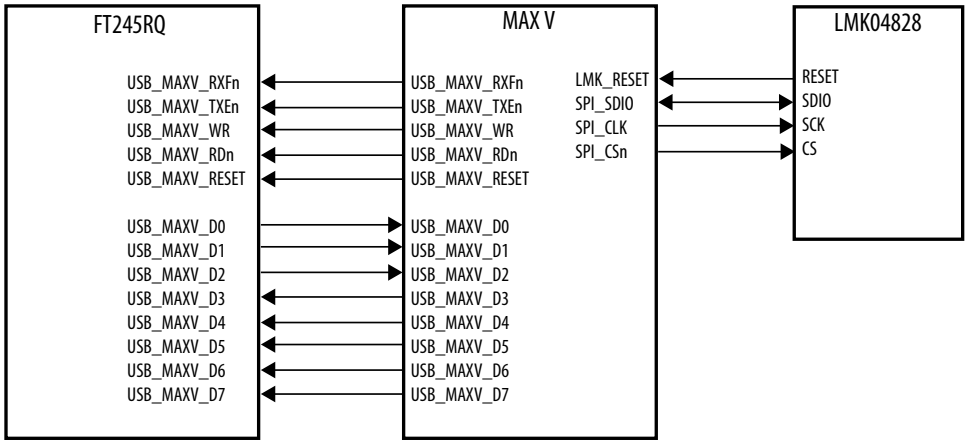

J33 is used to select reference clock sources.

Table 43. J33 Reference Clock sources

Description	Clock source of Clock Cleaner
OPEN	VCXO
SHORT	EXT_CLOCK

5.9.11.3. FPGA Resistor MUX

The JESD204B frame sources can be selected by resistor MUXs.

Table 44. JESD204B Frame Source Selection

JESD204B mode Master (clock source from Clock Cleaner) Select 1 (default)		
FMCA Slot Resistor MUX	FMCB Slot Resistor MUX	FPGA Resistor MUX
R612	R361	R575
R613	R365	R576
R621	R373	R584
R633	R383	R585
JESD204B mode Master (clock source from FPGA) Select 2		
FMCA Slot Resistor MUX	FMCB Slot Resistor MUX	
R610	R360	
R611	R361	
R620	R372	
R632	R382	

FBHA_P/N6, FBHA_PN17, FBHA_PN21 and FBHA_PN23 are selected as transceiver channels by default.

Table 45. FBHA6, FBHA17, FBHA21, and FBHA23 Passive MUX

MUX ID	Select 1 (default)	Select 2
FBHA6 MUX	FBD12C2MP/N	FBHA_P/N6
	C367	R437
	C376	R445
FBHA17 MUX	FBD15C2MP/N	FBHA_P/N17
	C422	R470
	C423	R471
FBHA21 MUX	FBD15M2CP/N	FBHA_P/N21
	C335	R404
	C336	R405
FBHA23 MUX	FBD10C2MP/N	FBHA_P/N23
	C346	R411
	C354	R427

FPGA 3A, 3E, 3G and 3H bank reference clocks can be selected from different clock sources.

Table 46. 3A, 3E, 3G and 3H Bank Reference Clock Selection

MUX ID	Select 1 (default)	Select 2	Select 3
REFLCK_3AMux	CLK_3A	FBCLK1M2C	
	R354	R355	
	R347	R348	
REFClk_3EMUX	LMK_CLEAN_CLK	FACLK1M2C	CLK_3E
	R576	R577	R579
	R575	R574	R578
Refsys_3EMUX	LMK_SYSREF	FACLK3BDIR	
	R585	R587	
	R584	R586	
REFCLK_3GMUX	RCLOCK_OUT	FACLK2BIDIR	
	R602	R604	
	R601	R603	
FA_EMI_3HMUX	FACLK0M2C	CLK_FAEMI	
	R596	R594	
	R595	R593	

5.9.11.4. FPGA Debug Port

This debug port needs support of both the HPS 16-bit trace debug port and Blaster direct debug port.

Table 47. FPGA Debug Port

BANK	Pin number	Schematic Name	HPS Trace Mode USER_DIPSW_HPS3 = 0	Blaster Direct Port USER_DIPSW_HPS3 = 1
2A	AM19	FTRACE_D0	HPS 16-bit Trace port D0	Direct_USB_D0
2A	AM16	FTRACE_D1	HPS 16-bit Trace port D1	Direct_USB_D1
2A	AN16	FTRACE_D2	HPS 16-bit Trace port D2	Direct_USB_D2
2A	AP16	FTRACE_D3	HPS 16-bit Trace port D3	Direct_USB_D3
2A	AR16	FTRACE_D4	HPS 16-bit Trace port D4	Direct_USB_D4
2A	AN19	FTRACE_D5	HPS 16-bit Trace port D5	Direct_USB_D5
2A	AP19	FTRACE_D6	HPS 16-bit Trace port D6	Direct_USB_D6
2A	AR18	FTRACE_D7	HPS 16-bit Trace port D7	Direct_USB_D7
2A	AT18	FTRACE_D8	HPS 16-bit Trace port D8	Direct_USB_RDn
2A	AR17	FTRACE_D9	HPS 16-bit Trace port D9	Direct_USB_Wrn
2A	AT17	FTRACE_D10	HPS 16-bit Trace port D10	Direct_USB_OEn
2A	AT19	FTRACE_D11	HPS 16-bit Trace port D11	Direct_USB_RESETn
2A	AU19	FTRACE_D12	HPS 16-bit Trace port D12	Direct_USB_EMPTY

continued...

BANK	Pin number	Schematic Name	HPS Trace Mode USER_DIPSW_HPS3 = 0	Blaster Direct Port USER_DIPSW_HPS3 = 1
2A	AT20	FTRACE_D13	HPS 16-bit Trace port D13	Direct_USB_FULL
2A	AU20	FTRACE_D14	HPS 16-bit Trace port D14	Direct_USB_SDA
2A	AU17	FTRACE_D15	HPS 16-bit Trace port D15	Direct_USB_SCL
2A	AU16	FTRACE_CLK	HPS Trace Clock	-
2A	AP18	USB_FPGA_CLK	-	Blaster USB Clock

5.9.11.5. FPGA PMBUS VID

Table 48. PMBUS VID Pin Assignment

BANK	Pin Number	Schematic Name	Description
2A	AV19	FPGA_IO4	A10PMBUSEN
2A	AW18	FPGA_IO5	PMBUS_ALTERTn
2A	AW21	VID_SCL_1V8	PMBUSVID SCL
2A	AW19	VID_SDA_1V8	PMBUSVID SDA

5.9.11.6. FPGA Auxiliary Signals

Table 49. FPGA Auxiliary Signals

BANK	Pin number	Schematic Name	Description
2A	AH18	PS_D0	PS mode data line
2A	AN18	CLK_50M_FPGA	MAXV 50Mhz clock
2A	AP20	CLKUSR	100Mhz clock
2A	AR20	FPGA_IO1	EMAC1 MDC signal
2A	AV16	FPGA_IO0	EMAC1 MDIO signal
2A	AW16	PCIE1V8_PERSTn	PCIE PHY 0 reset signal
2A	AV18	PCIE1V8_PERST1n	PCIE PHY 1 reset signal
2A	AV17	FPGA_IO3	EMAC2 MDC signal
2A	AV22	CVP_CONFDONE	HPS UART0 TX after FPGA configuration
2A	AW20	FPGA_IO2	EMAC2 MDIO signal
2A	AU21	CRCERROR	HPS UART0 RX after FPGA configuration
2I	AT22	DP_AUX_CH_N	Display port AUX port N
2I	AU22	DP_AUX_CH_P	Display port AUX port P

5.9.12. HPS SPIO Interface

The HPS can monitor and control the following functional signals through the SPI interface:

- HPS LED signals
- HPS Push button and DIP switch signals
- Power good and present signals
- Reset signals
- FMCA/B PCIE power enable signals
- SFP+ control signals
- I^2C master indication signal
- HPS warm reset signals
- PMBUS control signals

Table 50. SPI Interface Pin Definition

Pin	Description	Function
nCS	Chip Select	Active low signal that enables the slave device to receive or transfer data from the master device
SCK	Serial Clock	The clock signal produced from the master device to synchronize the data transfer
MOSI	Serial Data Input	Receive data serially at the positive SCK clock.
MISO	Serial Data output	Transmit data serially at the negative SCK clock edge.

The HPS SPI controller is the SPI master, and the MAX V works as a slave SPI I/O expander. The SPI interface uses 8-bit frame size. For MOSI, the first byte is used as an instruction byte. Bit [7:1] is the register address. Bit [0] is the operation flag where logic '1' is read flag and logic '0' is the write flag. The second byte is the data byte. For MISO, the first byte are zero byte (pad), second byte is the data byte.

Figure 31. HPS SPI Controller Write Timing Diagram

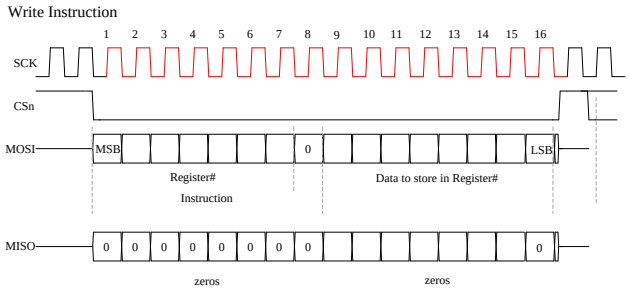

Figure 32. HPS SPI Write Timing (Write/Write)

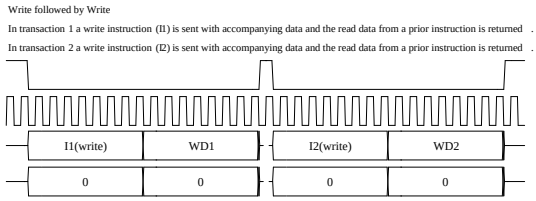

Figure 33. HPS SPI Read Timing Diagram

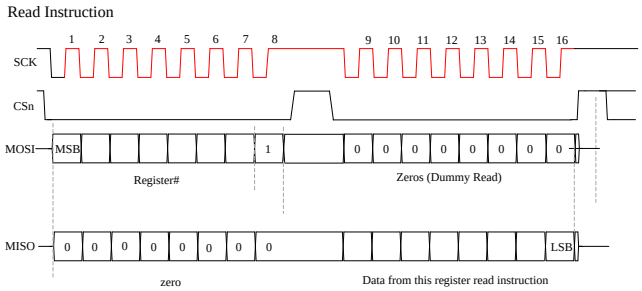

Figure 34. HPS SPI Read Timing (Read/Write)

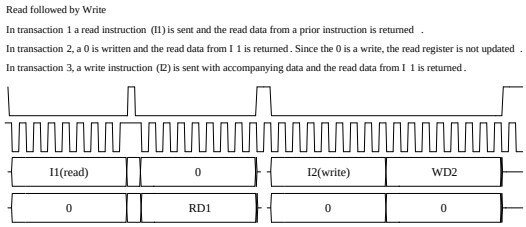

Figure 35. HPS SPI Read Timing (Read/Read)

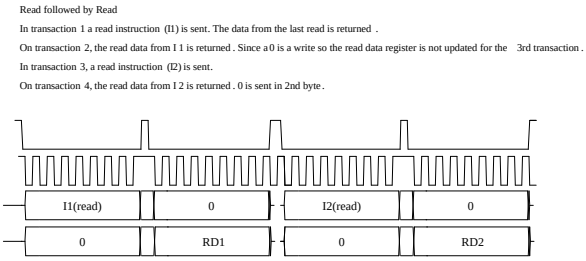

16 8-bit registers are implemented. For MOSI, the first byte is used as an instruction byte. Bit [7:1] is the register address. Bit [0] is the operation flag: Logic one is read flag. Logic zero is write flag. Second byte is data byte. For MISO, the first byte are zero byte (pad), second byte is data byte.

Table 51. SPI I/O Expander Register Definition

Instruction (8bits)	Instruction Description	Register Data Description
00000001	CPLD Revision Value	Register 0: Read-only Register Read value is the CPLD revision value
00000010	Write HPS LED Registers	Register 1: Bit[7:4] - USER_LED_HPS[3:0], Active low, default value is “0xF” Bit[3:0] - Reserved, default is “0x0”
00000011	Read HPS LED Registers	Register 1: Bit[7:4] - USER_LED_HPS[3:0] Bit[3:0] - Reserved Default value is “0xF0”

continued...

Instruction (8bits)	Instruction Description	Register Data Description
00000101	Read HPS Push Button and DIP switch registers	Register 2: Current Status of USER_PB_HPS and USER_DIPSW_HPS Bit[7:4] - USER_PB_HPS [3:0] Bit[3:0] - USER_DIPSW_HPS [3:0]
00000110	Write HPS Push Button IRQ flag clear registers	Register 3: Bit[7] - Write logic one to clear bit 7 flag in register 2, write logic zero to reset this bit after the flag is cleared Bit[6] - Write logic one to clear bit 6 flag in register 2, write logic zero to reset this bit after the flag is cleared Bit[5] - Write logic one to clear bit 5 flag in register 2 , write logic zero to reset this bit after the flag is cleared Bit[4] - Write logic one to clear bit 4 flag in register 2 , write logic zero to reset this bit after the flag is cleared
00000111	Read HPS Push Button IRQ flag Registers	Register 3: Read-only Register Bit[7:4] - USER_PB_HPS hold registers bits Bit 7: USER_PB_HPS3 IRQ Flag, active low, clear flag by register 3 bit 7. Bit 6: USER_PB_HPS2 IRQ Flag, active low, clear flag by register3 bit 6. Bit 5: USER_PB_HPS1 IRQ Flag, active low, clear flag by register3 bit 5. Bit 4: USER_PB_HPS0 IRQ Flag, active low, clear flag by register3 bit 4. Bit[3:0] - reserved If one of the push buttons is pressed, the corresponding PB's IRQ register bit is set and A10_SH_GPIO0 is configured to '0'. The A10_SH_GPIO0 returns to '1' after the HPS clears the associated bit (even if the PB is still held down). If the second push button is pressed while the HPS is handling the first push button interrupt, the second PB's IRQ register bit remains as a '0' until HPS clears the interrupt. A10_SH_GPIO0 stays low until the HPS clears the second PB's IRQ register bit.
00001001	Read Power good1 Registers	Register 4: Read-only register Bit[7] - operation_flag. '1': Power on finished. '0': The system is in Power down cycle Bit[6] - 1V8_Pgood. '1':1.8V power rail output is normal. '0':1.8V power rail output is abnormal. Bit[5] - 2V5_Pgood. '1':2.5V power rail output is normal. '0':2.5V power rail output is abnormal. Bit[4] - 3V3_Pgood. '1':3.3V power rail output is normal. '0':3.3V power rail output is abnormal. Bit[3] - 5V0_Pgood. '1':5V power rail output is normal. '0':5V power rail output is abnormal. Bit[2] - 0V9_Pgood. '1':0.9V power rail output is normal. '0': 0.9V power rail output is abnormal. Bit[1] - 0V95_Pgood. '1':0.95V power rail output is normal. '0': 0.95V power rail output is abnormal. Bit[0] - 1V0_Pgood. '1':1.0V power rail output is normal. '0': 1.0V power rail output is abnormal.
00001011	Read Power good2 Registers	Register 5: Read-only register Bit[7] - HPS_Pgood. '1': HPS core power rail output is normal. '0': HPS core power rail output is abnormal. Bit[6] - HILOHPS_VDDPgood. '1':HPS memory power rail output is normal. '0': HPS memory power rail output is abnormal. Bit[5] - HILO_VDDPgood. '1':FPGA memory VDD power rail output is normal. '0': FPGA memory VDD power rail output is abnormal. Bit[4] - HILO_VDDQPgood . '1': FPGA memory VDDQ power rail output is normal. '0': FPGA memory VDDQ power rail output is abnormal. Bit[3] - FMCAVADJPGood. '1':FMCAVADJ power rail output is normal. '0': FMCAVADJ power rail output is abnormal.

continued...

Instruction (8bits)	Instruction Description	Register Data Description
		Bit[2] - FMCBVADJPGood. 1':FMCBVADJ power rail output is normal. '0': FMCBVADJ power rail output is abnormal. Bit[1] - FAC2MPgood. 1':FMCA slot powers are normal. '0': FMCA slot powers are abnormal. Bit[0] - FBC2MPgood. 1':FMCB slot powers are normal. '0': FMCB slot powers are abnormal.
00001101	Read Power good3 & present Registers	Register 6: Read-only Register Bit[7] - FAM2CPgood. '1':FMCA slot DC power outputs are normal. '0': FMCA slot DC power outputs are abnormal. Bit[6] - 10V_Fail_n. '1': Input voltage is above 10V. '0': Input voltage is below 10V. Bit[5] - BF_PRESENTn. '1': no boot flash card. '0': boot flash present Bit[4] - FILE_PRESENTn. '1': no file flash card. '0': file flash present Bit[3] - FMCA_PRESENTn. '1': no FMCA card. '0': FMCA card present Bit[2] - FMCB_PRESENTn . '1': no FMCB card. '0': FMCB present Bit[1] - PCIE_PRESENTn. '1': no PCIE card. '0': PCIE card present Bit[0] - Reserved
00001110	Write FMCA/B PCIE Power enable Registers	Register 7 Bit[7] - PCIE_EN. '1': Enable PCIE RC slot power. '0': Disable PCIE RC slot power. Bit[6] - PCIE_AUXEN. '1': Enable PCIE RC slot auxiliary power. '0': Disable PCIE RC auxiliary power. Bit[5:0] - Reserved
00001111	Read FMCA/B PCIE Power enable Registers	Register 7 Read the status of power enable register.
00010000	Write HPS Resets Registers	Register 8 Bit[7] - Reserved Bit[6] - Reserved Bit[5] - Reserved Bit[4] - Reserved Bit[3] - Reserved Bit[2] - Reserved Bit[1] - ENET_HPS_RESETn. Active low to reset the HPS Ethernet port Bit[0] - Reserved
00010001	Read HPS Reset Registers	Register 8 Bit[7] - HPS_UARTA_RESETn. Read-only bit. Always '1' Bit[6] - HPS_WARM_RESETn. Read-only bit. '0': WARM_Reset push button is pressed. '1' No action Bit[5] - HPS_WARM_RESET1n. Read - only bit. '0': Trace reset is detected. '1' No action Bit[4] - HPS_COLD_RESETn. Read-only bit '0': Cold_Reset push button is pressed. '1' No action Bit[3] - HPS_NPOR. Read-only, NPOR for HPS, active low Bit[2] - HPS_NRST. Read-only, NRST for HPS, active low Bit[1] - ENET_HPS_RESETn. Read the status of ENET_HPS_RESETn Bit[0] - ENET_HPS_INTn. ENET_HPS_INTn current status.
00010010	Write USB & BQSPI& FILE & PCIE Resets Registers	Register 9 Bit[7] - USB_RESET. Active high to reset the HPS USB. Bit[6] - BQSPI_RESETn. Active low to reset the boot flash. Bit[5] - FILE_RESETn. Active low to reset the FILE flash. Bit[4] - PCIE_PERSTn. Active low to reset the PCIE slot. Bit[3:0] - Reserved

continued...

Instruction (8bits)	Instruction Description	Register Data Description
00010011	Read USB & BQSPI& FILE & PCIE Resets Registers	Register 9 Read the status of USB & BQSPI& FILE & PCIE Resets Bit[7] - USB_RESET Bit[6] - BQSPI_RESETn Bit[5] - FILE_RESETn Bit[4] - PCIE_RESETn Bit[3:0] - Reserved
00010100	Write SFPA Control Registers	Register 10 Bit[7] - SFPA_TXDISABLE. '1': Disable SFPA TX.'0': Enable SFPA TX. Bit[6:5] - SFPA_RATESEL[1:0].SFPA RX rate selection 0: <4.25GBd1: > 4.25GBd Bit[4:0] - Reserved
00010101	Read SFPA Control Registers	Register 10 Bit[7] - SFPA_TXDISABLE. '1': Disable SFPA TX.'0': Enable SFPA TX. Bit[6:5] - SFPA_RATESEL[1:0].SFPA RX rate selection 0: <4.25GBd1: > 4.25GBd Bit[4] - SFPA_LOS. Loss signal of SFPA. ‘1’:LOS, ‘0’:normal. Bit[3] - SFPA_FAULT. Tx fault signal of SFPA. ‘1’:fault, ‘0’:normal. Bit[2] - SFPA_PRESENTn .Detect signal of SFP module in slot A . ‘1’: no SFP module. ‘0’: SFP module present. Bit[1:0] - Reserved
00010110	Write SFPB Control Registers	Register 11 Bit[7] - SFPB_TXDISABLE. '1': Disable SFPB TX.'0': Enable SFPB TX. Bit[6:5] - SFPA_RATESEL[1:0].SFPA RX rate selection 0: <4.25GBd1: > 4.25GBd Bit[4:0] - Reserved
00010111	Read SFPB Control Registers	Register 11 Bit[7] - SFPB_TXDISABLE. Read the status of SFPB TXDISABLE. Bit[6:5] - SFPB_RATESEL[1:0] .Read the status of SFPB rate selection. Bit[4] - SFPB_LOS. Read the Los signal of SFPB.'1': Loss '0': Normal. Bit[3] - SFPB_FAULT. Read the Tx Fault signal of SFPB.'1': Fault '0': Normal. Bit[2] - SFPB_PRESENTn.Detect signal of SFP module in slot B. ‘1’: no SFP module. ‘0’: SFP module present Bit[1:0] - Reserved
00011001	Read I^2C master Register	Register 12 Bit[7] - I^2C master indication. ‘1’ :HPS is the I^2C master,’0’ MAXV is the I^2C master Bit[6:0] - Reserved
00011010	Write HPS Warm reset Register	Register 13 Bit[7:6] - “00” Bit[5] - HPS_SPI_WARM_RESETn. Active low to warm reset HPS; MAX V automatically clears this bit 1us after it becomes active. Bit[4:0] - “00000”
00011011	Read HPS Warm reset Register	Register 13 Bit[7:6] - “00” Bit[5] - HPS_SPI_WARM_RESETn. Read the status of HPS SPI warm reset. Bit[4:0] - “00000”
00011100	Write HPS Warm Reset Key Register	Register 14 Bit[7:0] - key register of HPS warm reset. Value of 0xA8 allows bit5 in register13 to be recognized. Software must write a different value to this register after a valid write to bit5 in Register13.
00011101	Read HPS Warm Reset Key Register	Register 14

continued...

Instruction (8bits)	Instruction Description	Register Data Description
		Value currently in HPS Warm Reset Key register.
00011110	Write PM Bus Control Register	Register 15 Bit[7] - A10PMBUSEN. '1': Enable the Arria 10 FPGA PMBUS. '0': Disable the Arria 10 FPGA PMBUS. Bit[6] - A10_PMBUSDIS_N. '1': Enable the System MAX5/HPS PMBus.'0': Disable the System MAX5/HPS PMBus. Bit[5:0] - Reserved
00011111	Read PM Bus Control Register	Register 15 Bit[7] - A10PMBUSEN. '1': The Arria 10 FPGA PMBUS is enabled. '0: The Arria 10 FPGA PMBUS is disabled. Bit[6] - A10_PMBUSDIS_N. '1': The System MAXV/HPS PMBus is enabled.'0': The System MAXV/HPS PMBus is disabled. Bit[5] - Pmbus_Altertn. '1': I^2C is normal.'0' : I^2C Hangs Bit[4:0] - Reserved

5.10. Memory

This section describes the development board's memory interface support and also the signal names, types, and connectivity relative to the Arria 10 SoC. The development board has the following memory interfaces:

- DDR3/DDR4 (HPS)
- DDR3/DDR4/QDRIV/RLDRAM3 (FPGA)
- Boot Flash:
  - QSPI
  - Micro SD flash
  - NAND
- I^2C EEPROM

Related Information

- Timing Analysis
- DDR, DDR2, and DDR3 SDRAM Design Tutorials

5.10.1. FPGA External Memory

One 72-bit memory interface connected to a HILO memory card is assigned into three I/O banks (3B, 3C and 3D). A hard memory core is assigned to this interface. The table below lists the memory interface pin assignment of DDR3, DDR4, RLDRAM3 and QDRIV interfaces.

Table 52. FPGA External Memory Interface Pin Assignment

BANK	Pin Number	DDR3	DDR4	RLDRAM3	QDRIV	Schematic Name
3D	W8	DDR3 DQ36	DDR4 DQ36	RLDRAM3 DQ23	QDRIV DQB4	MEM_DQB4
3D	Y8	DDR3 DQ32	DDR4 DQ32	RLDRAM3 DQ19	QDRIV DQB0	MEM_DQB0
3D	Y10	DDR3 DQ37	DDR4 DQ37	RLDRAM3 DQ24	QDRIV DQB5	MEM_DQB5
3D	AA9	DDR3 DQ38	DDR4 DQ38	RLDRAM3 DQ25	QDRIV DQB6	MEM_DQB6
3D	AB11	DDR3 DQ33	DDR4 DQ33	RLDRAM3 DQ26	QDRIV QKB_N0	MEM_DQB1
3D	AA10	DDR3 DM4	DDR4 LDM_n2	RLDRAM3 DQ18	QDRIV DINVB0	MEM_DMB0
3D	AA8	DDr3 DQSn4	DQSL_n2	RLDRAM3 QK2n	QDRIV DQB17	MEM_DQSB_N0
3D	AA7	DDR3 DQSp4	DQSL_p2	RLDRAM3 QK2p	QDRIV DQB16	MEM_DQSB_P0
3D	AB10	DDR3 DQB34	DDR4 DQ34	RLDRAM3 DQ21	QDRIV DQB2	MEM_DQB2
3D	AB9	DDR3 DQ35	DDR4 DQ35	RLDRAM3 DQ22	QDRIV DQB3	MEM_DQB3
3D	AB7	DDR3 DQ39	DDR4 DQ39	RLDRAM3 DQ26	QDRIV QKB_N0	MEM_DQB7
3D	AC7				QDRIV QKB_P0	MEM_QKB_P0
3D	Y7	DDR3 DQ41	DDR4 DQ41		QDRIV DQB8	MEM_DQB9
3D	Y6	DDR3 DQ40	DDR4 DQ40		QDRIV DQB7	MEM_DQB8
3D	Y5	DDR3 DQ43	DDR4 DQ43		QDRIV DQB10	MEM_DQB11
3D	AA5	DDR3 DQ42	DDR4 DQ42		QDRIV DQB9	MEM_DQB10
3D	AD5	DDR3 DQ46	DDR4 DQ46		QDRIV DQB13	MEM_DQB14
3D	AD4	DDR3 DQ44	DDR4 DQ44		QDRIV DQB11	MEM_DQB12
3D	AE6	DDR3 DQS_n5	DDR4 DQSU_n2	RLDRAM3 DK0n	QDRIV DKB_n0	MEM_DQSB_N1
3D	AE5	DDR3 DQs_p5	DDR4 DQSU_p2	RLDRAM3 DK0p	QDRIV DKB_p0	MEM_DQSB_P1
3D	AC6	DDR3 DQ45	DDR4 DQB45		QDRIV DQB12	MEM_DQB13

continued...

BANK	Pin Number	DDR3	DDR4	RLDRAM3	QDRIV	Schematic Name
3D	AD6				QDRIV DQB15	MEM_DQB32
3D	AB6	DDR3 DQ47	DDR4 DQ47		QDRIV DQB14	MEM_DQB15
3D	AB5	DDR3 DM5	DDR4 UDM_n2		QDRIV QVLDB0	MEM_DMB1
3D	Y3	DDR3 DQ52	DDR4 DQ52	RLDRAM3 DQ5	QDRIV DQB22	MEM_DQB20
3D	Y2	DDR3 DQ54	DDR4 DQ54	RLDRAM3 DQ7	QDRIV DQB24	MEM_DQB22
3D	W1	DDR3 DQ49	DDR4 DQ49	RLDRAM3 DQ2	QDRIV DQB19	MEM_DQB17
3D	Y1	DDR3 DQ50	DDR4 DQ50	RLDRAM3 DQ3	QDRIV DQB20	MEM_DQB18
3D	AA4	DDR3 DQ51	DDR4 DQ51	RLDRAM3 DQ4	QDRIV DQB21	MEM_DQB19
3D	AB4	DDR3 DQ48	DDR4 DQ48	RLDRAM3 DQ1	QDRIV DQB18	MEM_DQB16
3D	AA3	DDR3 DQS_n6	DDR4 DQSL_n3	RLDRAM3 QK0n	QDRIV DQB35	MEM_DQSB_N2
3D	AA2	DDR3 DQS_p6	DDR4 DQSL_p3	RLDRAM3 QK0	QDRIV DQB34	MEM_DQSB_P2
3D	AB2	DDR3 DM6	DDR4 LDM_n3	RLDRAM3 DQ0	QDRIV DINVB1	MEM_DMB2
3D	AB1	DDR3 DQ53	DDR4 DQ53	RLDRAM3 DQ6	QDRIV DQB23	MEM_DQB21
3D	AC4	DDR3 DQ55	DDR4 DQ55	RLDRAM3 DQ8	QDRIV QKB_N1	MEM_DQB23
3D	AC3			RLDRAM3 DM0	QDRIV QKB_P1	MEM_QKB_P1
3D	AC1	DDR3 DM7	DDR4 UDM_n3		QDRIV QVLDB1	MEM_DMB3
3D	AD1	DDR3 DQ63	DDR4 DQ63		QDRIV DQB32	MEM_DQB31
3D	AD3	DDR3 DQ62	DDR4 DQ62		QDRIV DQB31	MEM_DQB30
3D	AC2				QDRIV DQB33	MEM_DQB33
3D	AF2	DDR3 DQ61	DDR4 DQ61		QDRIV DQB29	MEM_DQB29
3D	AG2	DDR3 DQ60	DDR4 DQ60		QDRIV DQB28	MEM_DQB28
3D	AG1	DDR3 DQSn7	DDR4 DQSU_n3		DKB_n1	MEM_DQSB_N3
3D	AH1	DDR3 DQSp7	DDR4 DQSU_p3		DKB_P1	MEM_DQSB_P3
3D	AE2	DDR3 DQ57	DDR4 DQ57		QDRIV DQB26	MEM_DQB25

continued...

BANK	Pin Number	DDR3	DDR4	RLDRAM3	QDRIV	Schematic Name
3D	AE1	DDR3 DQ58	DDR4 DQ58		QDRIV DQB27	MEM_DQB26
3D	AE3	DDR3 DQ56	DDR4 DQ56		QDRIV DQB24	MEM_DQB24
3D	AF3	DDR3 DQ59	DDR4 DQ59		QDRIV DQB28	MEM_DQB27
3C	AC9	DDR3 DQ67	DDR4 DQ67			MEM_DQ_ADDR_CMD4
3C	AC8	DDR3 DQ66	DDR4 DQ66			MEM_DQ_ADDR_CMD3
3C	AE11	DDR3 DM8	DDR4 LDM_n4			MEM_DQ_ADDR_CMD0
3C	AE10	DDR3 DQ65	DDR4 DQ65			MEM_DQ_ADDR_CMD2
3C	AD9	DDR3 DQ64	DDR4 DQ64			MEM_DQ_ADDR_CMD1
3C	AD8	DDR3 DQ68	DDR4 DQ68			MEM_DQ_ADDR_CMD5
3C	AE8	DDR3_DQS8_n	DDR4 DQSL_n4			MEM_DQS_ADDR_CMD_N
3C	AF8	DDR3_DQS8_p	DDR4_DQSL_P4			MEM_DQS_ADDR_CMD_P
3C	AC11	DDR3 DQ69	DQ69			MEM_DQ_ADDR_CMD6
3C	AD10	DDR3 DQ70	DQ70			MEM_DQ_ADDR_CMD6
3C	AF10	DDR3 DQ71	DQ71			MEM_DQ_ADDR_CMD8
3C	AF9		DDR4 ALERTn	RLDRAM3 Csn3	QDRIV A22	MEM_ADDR_CMD29
3C	AG4	DDR3 BA2	DDR4 BG0	RLDRAM3 BA2	QDRIV A21	MEM_ADDR_CMD18
3C	AH4	DDR3 BA1	DDR4 BA1	RLDRAM3 BA1	QDRIV A20	MEM_ADDR_CMD17
3C	AF5	DDR3 BA0	DDR4 BA0	RLDRAM3 BA0	QDRIV A19	MEM_ADDR_CMD16
3C	AF4	CASn	DDr4 A17	RLDRAM3 A17	QDRIV A18	MEM_ADDR_CMD19
3C	AE7	RASn	DDR4 A16	RLDRAM3 A18	QDRIV A17	MEM_ADDR_CMD26
3C	AF7	DDR3 A15	DDR4 A15	RLDRAM3 A15	QDRIV A16	MEM_ADDR_CMD15
3C	AH3	DDR3 A14	DDR4 A14	RLDRAM3 A14	QDRIV A15	MEM_ADDR_CMD14
3C	AJ3	DDR3 A13	DDR4 A13	RLDRAM3 A13	QDRIV A14	MEM_ADDR_CMD13
3C	AG7	DDR3 A12	DDR4 A12	RLDRAM3 A12	QDRIV A13	MEM_ADDR_CMD12
3C	AH7	240 ohm Reference resistor				MEM_ADDR_CMD12
3C	AG6	133Mhz Reference clock				CLK_EMI_N
3C	AG5	133Mhz Reference clock				CLK_EMI_P
3C	AH6	DDR3 A11	DDR4 A11	RLDRAM3 A11	QDRIV A12	MEM_ADDR_CMD11
3C	AJ5	DDR3 A10	DDR4 A10	RLDRAM3 A10	QDRIV A11	MEM_ADDR_CMD10
3C	AJ4	DDR3 A9	DDR4 A9	RLDRAM3 A9	QDRIV A10	MEM_ADDR_CMD9
3C	AK3	DDR3 A8	DDR4 A8	RLDRAM3 A8	QDRIV A9	MEM_ADDR_CMD8
3C	AJ6	DDR3 A7	DDR4 A7	RLDRAM3 A7	QDRIV A8	MEM_ADDR_CMD7

continued...

BANK	Pin Number	DDR3	DDR4	RLDRAM3	QDRIV	Schematic Name
3C	AK6	DDR3 A6	DDR4 A6	RLDRAM3 A6	QDRIV A7	MEM_ADDR_CMD6
3C	AK5	DDR3 A5	DDR4 A5	RLDRAM3 A5	QDRIV A6	MEM_ADDR_CMD5
3C	AL5	DDR3 A4	DDR4 A4	RLDRAM3 A4	QDRIV A5	MEM_ADDR_CMD4
3C	AL4	DDR3 A3	DDR4 A3	RLDRAM3 A3	QDRIV A4	MEM_ADDR_CMD3
3C	AL3	DDR3 A2	DDR4 A2	RLDRAM3 A2	QDRIV A3	MEM_ADDR_CMD2
3C	AM4	DDR3 A1	DDR4 A1	RLDRAM3 A1	QDRIV A2	MEM_ADDR_CMD1
3C	AN3	DDR3 A0	DDR4 A0	RLDRAM3 A0	QDRIV A1	MEM_ADDR_CMD0
3C	AH2		DDR4 PAR	RLDRAM3 REFn	QDRIV A0	MEM_ADDR_CMD31
3C	AJ1		DDR4 Csn1	RLDRAM3 Csn2	QDRIV AINV	MEM_ADDR_CMD30
3C	AK2	DDR3 CLKn	DDR4 CLKn	RLDRAM3 CLKn	QDRIV CLKn	MEM_CLK_N
3C	AK1	DDR3 CLKp	DDR4 CLKp	RLDRAM3 CLkp	QDRIV CLKp	MEM_CLK_P
3C	AN1	DDR3 CKE1	DDR4 CKE1	RLDRAM3 Wen	QDRIV RWBn	MEM_ADDR_CMD21
3C	AM1	DDR3 CKE0	DDR4 CKE0	RLDRAM3 A20	QDRIV RWAn	MEM_ADDR_CMD20
3C	AR2	DDR3 ODT1	DDR4 ODT1	RLDRAM3 A19	QDRIV LDBn	MEM_ADDR_CMD25
3C	AR1	DDR3 ODT0	DDR4 ODT0	RLDRAM3 A18	QDRIV LDAn	MEM_ADDR_CMD24
3C	AL2	DDR3 Csn1	DDR4 Actn	RLDRAM3 CSn1	QDRIV LBK1n	MEM_ADDR_CMD23
3C	AM2	DDR3 Csn0	DDR4 Csn0	RLDRAM3 CSn0	QDRIV LDBn	MEM_ADDR_CMD22
3C	AN2	DDR3 resetn	DDR4 resetn	RLDRAM3 resetn	QDRIV resetn	MEM_ADDR_CMD27
3C	AP1	DDR3 Wen	DDR4 BG1	RLDRAM3 BA3	QDRIV CFGn	MEM_ADDR_CMD28
3B	AH8	DDR3 DM0	DDR4 LDM-N0		QDRIV DINVA0	MEM_DMA0
3B	AJ8	DDR3 DQ6	DDR4 DQ6		QDRIV DQA6	MEM_DQA6
3B	AH9	DDR3 DQ2	DDR4 DQ2		QDRIV DQA2	MEM_DQA2
3B	AJ9	DDR3 DQ1	DDR4 DQ1		QDRIV DQA1	MEM_DQA1
3B	AF12	DDR3 DQ3	DDR4 DQ3		QDRIV DQA3	MEM_DQA3
3B	AG12	DDR3 DQ0	DDR4 DQ0		QDRIV DQA0	MEM_DQA0
3B	AG10	DDR3 DQSn0	DDR4 DQSn0		QDRIV DQA17	MEM_DQSA_N0
3B	AG9	DDR3 DQSp0	DDR4 DQSp0		QDRIV DQA16	MEM_DQSA_P0
3B	AG11	DDR3 DQ5	DDR4 DQ5		QDRIV DQA5	MEM_DQA5
3B	AH11	DDR3 DQ4	DDR4 DQ4		QDRIV DQA4	MEM_DQA4
3B	AJ11	DDR3 DQ7	DDR4 DQ7		QDRIV QKA_N0	MEM_DQA7

continued...

BANK	Pin Number	DDR3	DDR4	RLDRAM3	QDRIV	Schematic Name
3B	AJ10				QDRIV QKA_P0	MEM_QKA_P0
3B	AK7	DDR3 DQ13	DDR4 DQ13	RLDRAM3 DQ14	QDRIV DQA12	MEM_DQA13
3B	AL7	DDR3 DQ15	DDR4 DQ15	RLDRAM3 DQ16	QDRIV DQA14	MEM_DQA15
3B	AM6	DDR3 DM1	DDR4 UDM_n0		QDRIV QVLDA0	MEM_DMA1
3B	AN6	DDR3 DQ12	DDR4 DQ12	RLDRAM3 DQ13	QDRIV DQA11	MEM_DQA12
3B	AK8	DDR3 DQ8	DDR4 DQ8	RLDRAM3 DQ9	QDRIV DQA8	MEM_DQA8
3B	AL8	DDR3 DQ9	DDR4 DQ9	RLDRAM3 DQ10	QDRIV DQA9	MEM_DQA9
3B	AM7	DDR3 DQS_n1	DDR4 DQSU_n0	RLDRAM3 QK1n	DKAn0	MEM_DQSA_N1
3B	AN7	DDR3 DQS_p1	DDR4 DQSU_p0	RLDRAM3 QK1p	DKAP0	MEM_DQSA_P1
3B	AM9	DDR3 DQ14	DDR4 DQ14	RLDRAM3 DQ15	QDRIV DQA13	MEM_DQA14
3B	AN8			RLDRAM3 DQ17	QDRIV DQA15	MEM_DQA32
3B	AK10	DDR3 DQ10	DDR4 DQ10	RLDRAM3 DQ11	QDRIV DQA9	MEM_DQA32
3B	AL9	DDR3 DQ11	DDR4 DQ11	RLDRAM3 DQ12	QDRIV DQA110	MEM_DQA11
3B	AM5	DDR3 DM2	DDR4 LDM_n1	RLDRAM3 DQ13	QDRIV DINVA1	MEM_DMA2
3B	AN4	DDR3 DQ20	DDR4 DQ20		QDRIV DQA22	MEM_DQA20
3B	AP3	DDR3 DQ19	DDR4 DQ19	RLDRAM3 QVLD1	QDRIV DQA21	MEM_DQA19
3B	AR3	DDR3 DQ16	DDR4 DQ16		QDRIV DQA18	MEM_DQA16
3B	AP5	DDR3 DQ22	DDR4 DQ22		QDRIV DQA24	MEM_DQA22
3B	AP4	DDR3 DQ18	DDR4 DQ18		QDRIV DQA20	MEM_DQA18
3B	AP6	DDR3 DQSn2	DDR4 DQSLn1	RLDRAM3 DK1n	QDRIV DQA35	MEM_DQSA_N2
3B	AR5	DDR3 DQSp2	DDR4 DQSLp1	RLDRAM3 DK1p	QDRIV DQA34	MEM_DQSA_P2
3B	AU2	DDR3 DQ17	DDR4 DQ17		QDRIV DQA19	MEM_DQA17
3B	AU1	DDR3 DQ21	DDR4 DQ21		QDRIV DQA23	MEM_DQA21

continued...

BANK	Pin Number	DDR3	DDR4	RLDRAM3	QDRIV	Schematic Name
3B	AT3	DDR3 DQ23	DDR4 DQ23		QDRIV QKA_n1	MEM_DQA23
3B	AT2				QDRIV QKA_p1	MEM_QKA_P1
3B	AT5	DDR3 DQ31	DDR4 DQ31	RLDRAM3 DQ34	QDRIV DQA32	MEM_DQA31
3B	AT4	DDR3 DM3	DDR4 UDM_n1		QDRIV QVLDA1	MEM_DMA3
3B	AR7	DDR3 DQ30	DDR4 DQ30	RLDRAM3 DQ33	QDRIV DQA31	MEM_DQA30
3B	AR6	DDR3 DQ29	DDR4 DQ29	RLDRAM3 DQ32	QDRIV DQA30	MEM_DQA29
3B	AU4	DDR3 DQ24	DDR4 DQ24	RLDRAM3 DQ27	QDRIV DQA25	MEM_DQA24
3B	AV4	DDR3 DQ27	DDR4 DQ27	RLDRAM3 DQ30	QDRIV DQA28	MEM_DQA27
3B	AV6	DDR3 DQS3n	DDR4 DQSU_n1	RLDRAM3 QK3n	QDRIV DKA_n1	MEM_DQSA_N3
3B	AW6	DDR3 DQS3p	DDR4 DQSU_p1	RLDRAM3 QK3n	QDRIV DKA_p1	MEM_DQSA_P3
3B	AU6			RLDRAM3 DQ35	QDRIV DQA33	MEM_DQA33
3B	AU5	DDR3 DQ26	DDR4 DQ26	RLDRAM3 DQ29	QDRIV DQA27	MEM_DQA26
3B	AW5	DDR3 DQ25	DDR4 DQ25	RLDRAM3 DQ28	QDRIV DQA26	MEM_DQA25
3B	AW4	DDR3 DQ28	DDR4 DQ28	RLDRAM3 DQ31	QDRIV DQA29	MEM_DQA28

5.10.2. HPS External Memory

A 40-bit HPS DDR3/4 memory interface (32-bit data and 8-bit ECC data) assigned to FPGA 2K and 2J I/O banks is connected to a HILO memory daughtercard.

Table 53. Bank 2K and 2J I/O Pin Assignments for DDR3 and DDR4 Interface

BANK	Pin Number	DDR3 Interface	DDR4 Interface	Schematic Name
2K	P25	DM4	DM4	HMEM_DQ_ADDR_CMD0
2K	N25	DQ4 bit	DQ4 bit	HMEM_DQ_ADDR_CMD3
2K	L26	DQ4 bit	DQ4 bit	HMEM_DQ_ADDR_CMD4
2K	K26	DQ4 bit	DQ bit	HMEM_DQ_ADDR_CMD2
2K	M25	DQ4 bit	DQ bit	HMEM_DQ_ADDR_CMD1
2K	L25	DQ4 bit	DQ bit	HMEM_DQ_ADDR_CMD5
2K	L24	DQS4_n	DQS4_n	HMEM_DQS_ADDR_CMD_N
2K	K25	DQS4_p	DQS4_P	HMEM_DQS_ADDR_CMD_P
2K	N24	DQ4 bit	DQ bit	HMEM_DQ_ADDR_CMD6
2K	M24	DQ4 bit	DQ bit	HMEM_DQ_ADDR_CMD7
2K	J25	DQ4 bit	DQ bit	HMEM_DQ_ADDR_CMD8
2K	J26			
2K	J24	BA2	BG0	HMEM_ADDR_CMD18
2K	H24	BA1	BA1	HMEM_ADDR_CMD17
2K	E25	BA0	BA0	HMEM_ADDR_CMD16
2K	D25	CASn	A17	HMEM_ADDR_CMD19
2K	F23	RASn	A16	HMEM_ADDR_CMD26
2K	F24	A15	A15	HMEM_ADDR_CMD15
2K	G25	A14	A14	HMEM_ADDR_CMD14
2K	G26	A13	A13	HMEM_ADDR_CMD13
2K	F26	A12	A12	HMEM_ADDR_CMD12
2K	E26	240 ohm reference resistor	240 ohm reference resistor	RZQ_2K
2K	G24	133Mhz DDR reference clock	133Mhz DDR reference clock	CLK_HPSEMI_N
2K	F25	133Mhz DDR reference clock	133Mhz DDR reference clock	CLK_HPSEMI_P
2K	D24	A11	A11	HMEM_ADDR_CMD11
2K	C24	A10	A10	HMEM_ADDR_CMD10
2K	E23	A9	A9	HMEM_ADDR_CMD9
2K	D23	A8	A8	HMEM_ADDR_CMD8
2K	C23	A7	A7	HMEM_ADDR_CMD7
2K	B22	A6	A6	HMEM_ADDR_CMD6
2K	B24	A5	A5	HMEM_ADDR_CMD5
2K	C25	A4	A4	HMEM_ADDR_CMD4

continued...

BANK	Pin Number	DDR3 Interface	DDR4 Interface	Schematic Name
2K	C21	A3	A3	HMEM_ADDR_CMD3
2K	C22	A2	A2	HMEM_ADDR_CMD2
2K	C26	A1	A1	HMEM_ADDR_CMD1
2K	B26	A0	A0	HMEM_ADDR_CMD0
2K	A18	No use	PAR	HMEM_ADDR_CMD31
2K	A17	No use	CSN1	HMEM_ADDR_CMD30
2K	B19	DDR3 interface clock	DDR4 interface clock	HMEM_CLK_N
2K	B20	DDR3 interface clock	DDR4 interface clock	HMEM_CLK_P
2K	A23	ClKe1	CKe1	HMEM_ADDR_CMD21
2K	A24	CKe0	CKe0	HMEM_ADDR_CMD20
2K	A25	ODT1	ODT1	HMEM_ADDR_CMD25
2K	A26	ODT0	ODT0	HMEM_ADDR_CMD24
2K	B21	CSn1	ACTn	HMEM_ADDR_CMD23
2K	A22	CSn0	CSn0	HMEM_ADDR_CMD22
2K	A19	Resetn	Resetn	HMEM_ADDR_CMD27
2K	A20	Wen	BG1	HMEM_ADDR_CMD28
2J	AV26	DM3	DM3	HPSMEM_DMA0
2J	AV27	DQ3 bit	DQ3 bit	HMEM_DQA4
2J	AU27	DQ3 bit	DQ3 bit	HMEM_DQA5
2J	AU28	DQ3 bit	DQ3 bit	HMEM_DQA6
2J	AV28	DQ3 bit	DQ3 bit	HMEM_DQA1
2J	AW28	DQ3 bit	DQ3 bit	HMEM_DQA0
2J	AW25	DQS 3n	DQS_n3	HMEM_DQSA_N0
2J	AW26	DQS 3p	DQS _p3	HMEM_DQSA_P0
2J	AV24	DQ3 bit	DQ3 bit	HMEM_DQA2
2J	AW24	DQ3 bit	DQ3 bit	HMEM_DQA3
2J	AV23	DQ3 bit	DQ3 bit	HMEM_DQA7
2J	AW23			
2J	AU25	DM2	DM2	HPSMEM_DMA1
2J	AU26	DQ2 bit	DQ2 bit	HMEM_DQA8
2J	AR26	DQ2 bit	DQ2 bit	HMEM_DQA11
2J	AT26	DQ2 bit	DQ2 bit	HMEM_DQA10
2J	AT23	DQ2 bit	DQ2 bit	HMEM_DQA14
2J	AU24	DQ2 bit	DQ2 bit	HMEM_DQA12
2J	AT24	DQS2n	DQS_n2	HMEM_DQSA_N1
2J	AT25	DQS2p	DQS_p2	HMEM_DQSA_P1

continued...

BANK	Pin Number	DDR3 Interface	DDR4 Interface	Schematic Name
2J	AP25	DQ2 bit	DQ2 bit	HMEM_DQA13
2J	AR25	DQ2 bit	DQ2 bit	HMEM_DQA9
2J	AP23	DQ2 bit	DQ2 bit	HMEM_DQA15
2J	AP24			
2J	AN26	DM1	DM1	HPSMEM_DMA2
2J	AP26	DQ1 bit	DQ1 bit	HMEM_DQA22
2J	AN23	DQ1 bit	DQ1 bit	HMEM_DQA17
2J	AN24	DQ1 bit	DQ1 bit	HMEM_DQA18
2J	AK26	DQ1 bit	DQ1 bit	HMEM_DQA19
2J	AL26	DQ1 bit	DQ1 bit	HMEM_DQA16
2J	AL25	DQSn1	DQS1n	HMEM_DQSA_N2
2J	AM25	DQSp1	DQSl1p	HMEM_DQSA_P2
2J	AK23	DQ1 bit	DQ1 bit	HMEM_DQA20
2J	AL23	DQ1 bit	DQ1 bit	HMEM_DQA21
2J	AM24	DQ1 bit	DQ1 bit	HMEM_DQA23
2J	AL24			
2J	AH25	DM0	DM0	HPSMEM_DMA3
2J	AJ26	DQ0 bit	DQ0 bit	HMEM_DQA31
2J	AH23	DQ0 bit	DQ0 bit	HMEM_DQA30
2J	AH24	DQ0 bit	DQ0 bit	HMEM_DQA27
2J	AJ23	DQ0 bit	DQ0 bit	HMEM_DQA29
2J	AJ24	DQ0 bit	DQ0 bit	HMEM_DQA28
2J	AJ25	DQSn0	DQS0n	HMEM_DQSA_N3
2J	AK25	DQSp0	DQS0p	HMEM_DQSA_P3
2J	AF25	DQ0 bit	DQ0 bit	HMEM_DQA25
2J	AG25	DQ0 bit	DQ0 bit	HMEM_DQA26
2J	AF24	DQ0 bit	DQ0 bit	HMEM_DQA24
2J	AG24	No use	Alertn	HMEM_ADDR_CMD29

5.10.3. HPS Boot Flash Interface

The HPS includes dedicated I/O. The dedicated I/O [17:4] are used to connect the following boot flash daughtercards:

- NAND Flash (x8) card: 128MB
- QSPI Flash card: 128MB
- SD Micro flash card: 4GB

Table 54. Dedicated I/O Pin Assignments

Bank	Pin Number	Schematic Signal Name	NF1.0 Interface	QSPI Interface	SDMMC Interface
Dedicated	E16	HPS_DIO0	NAND_ADQ0	QSPI_CLK	SDMMC_DATA0
Dedicated	H16	HPS_DIO1	NAND_ADQ1	QSPI_IO0	SDMMC_CMD
Dedicated	K16	HPS_DIO2	NAND_WEn	QSPI_SS0	SDMMC_CCLK
Dedicated	G16	HPS_DIO3	NAND_REn	QSPI_IO1	SDMMC_DATA1
Dedicated	H17	HPS_DIO4	NAND_ADQ2	QSPI_IO2_WPn	SDMMC_DATA2
Dedicated	F15	HPS_DIO5	NAND_ADQ3	QSPI_IO3_HOLD	SDMMC_DATA3
Dedicated	L17	HPS_DIO6	NAND_CLE	Not used	SDMMC_PWR
Dedicated	N19	HPS_DIO7	NAND_ALE	Not used	Not used
Dedicated	M19	HPS_DIO8	NAND_RB	Not used	SDMMC_DATA4
Dedicated	E15	HPS_DIO9	NAND_CEn	Not used	SDMMC_DATA5
Dedicated	J16	HPS_DIO10	NAND_ADQ4	Not used	SDMMC_DATA6
Dedicated	L18	HPS_DIO11	NAND_ADQ5	Not used	SDMMC_DATA7
Dedicated	M17	HPS_DIO12	NAND_ADQ6	Not used	Not used
Dedicated	K17	HPS_DIO13	NAND_ADQ7	Not used	Not used

The flash mode is selected by the B00TSEL bits defined in the flash daughtercard. B00TSEL values are 0x02, 0x04 and 0x06.

5.10.4. I^{2}C EEPROM

This board includes a 32 Kb EEPROM device. This device has a 2-wire I^{2}C serial interface bus and is organized as four blocks of 4K x 8-bit memory. The main function of the device is for EtherCAT IP usage, but it can be used for other storage purposes as well.

5.10.5. Daughtercards

Altera Corporation and its partners offer a variety of application-specific daughtercards. You can use these daughtercards to expand the functionality of the Arria 10 SoC development board. Reference designs and application-specific software accompany many of the daughtercards, further facilitating the design process. All daughtercards are available for purchase on Altera.com.

Table 55. Arria 10 SoC Development Board Daughtercards

Daughtercard	Daughtercard Image	Memory Component	Part Number
Boot Flash Daughtercards			
Micro SD Boot Flash Card	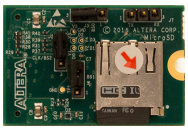	Kingston MBLY10G2/4GB	QSHDC-MSD-A
QSPI Boot Flash Card	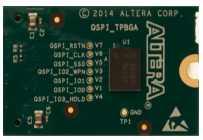	Micron MT25QU01GBBA8E12-0SIT	QSHDC-QSPI-A
NAND Boot Flash Card	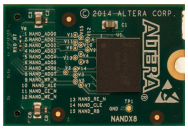	Micron MT29F1G08ABBEAH4	QSHDC-NAND-A
HILO memory Daughtercards			
RLDRAM3		Micron MT44K16M36RB-093E	HLDC-RLDRAM3-A
DDR3	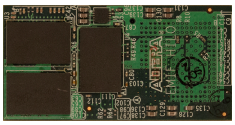	Micron MT41K512M16TNA-107:E	HLDC-DDR3-A
DDR4	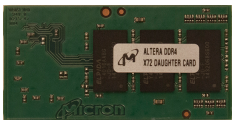	Micron EDY4016AABG-DR-F	HLDC-DDR4-A
QDRIV	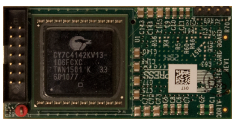	Cypress CY7C4142KV13-106FCXC	HLDC-QDRIV-A

Related Information

Intel FPGA Development Kits

5.11. Board Power Supply

This section describes the Arria 10 SoC development board's power supply. A laptop style DC power supply is provided with the development kit. Use only the supplied power supply. The power supply has an auto-sensing input voltage range of 100 ~ 240 VAC and outputs 12 VDC power at 16 A to the development board. The 12 VDC input power is then stepped down to various power rails used by the board components.

An on-board multi-channel analog-to-digital converter (ADC) measures both the voltage and current for several specific board rails. The power utilization is displayed on a graphical user interface (GUI) that can graph power consumption versus time.

5.11.1. Power Distribution System

The following figure below shows the power distribution system on the A10 SoC development board.

Figure 36. Arria 10 SoC Development Kit Power Distribution Network Diagram

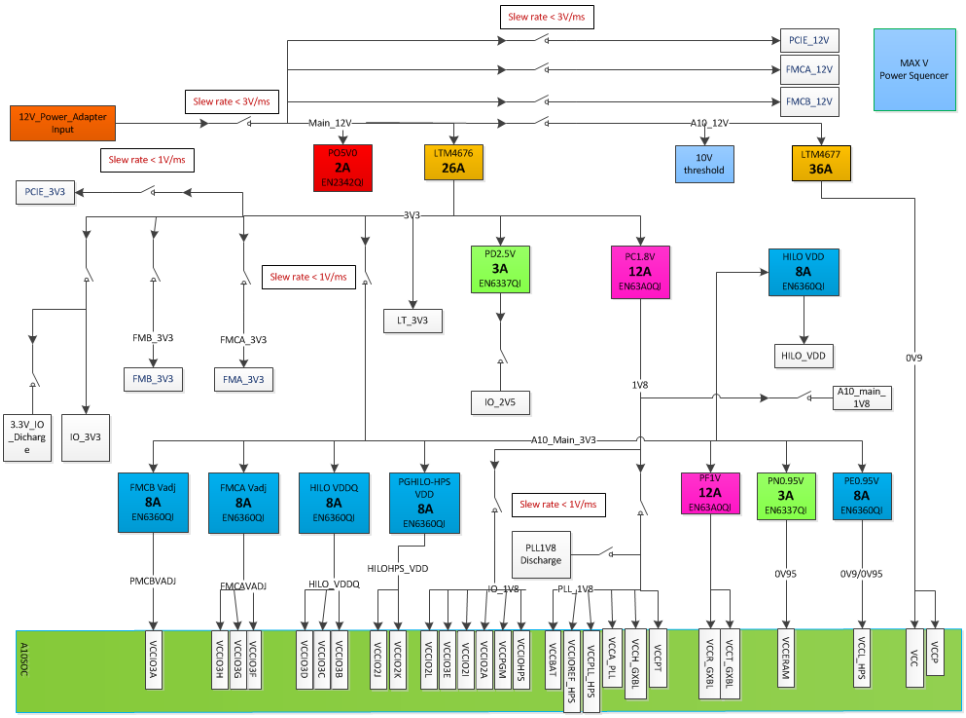

5.11.2. Power Measurement

You can insert a DC1613A Linear Dongle into the J28 connector to collect voltage, current, and wattage. 24-bit differential ADC devices are used to measure the on-board power voltage, current, and wattage. Precision sense resistors split the ADC devices and rails from the primary supply plane for the ADC to measure voltage and current. An I^2C bus connects these ADC devices to the MAX V CPLD EPM2210 System Controller as well as the Arria 10 Soc FPGA.

A. Additional Information

A.1. Document Revision History for the Intel Arria 10 SoC Development Kit User Guide

Document Version	Changes
2023.07.12	• Retitled the document from *Arria 10 SoC Development Kit User Guide* to *Intel Arria 10 SoC Development Kit User Guide*. • Minor text edits.

Table 56. Intel Arria 10 SoC Development Kit User Guide Revision History

Date	Version	Changes
August 2018	2018.08.09	Updated Memory on page 105. HPS-EMIF only supports DDR3 and DDR4 while the FPGA EMIF supports the rest of the protocols.
September 2017	2017.09.05	• Updated Dedicated I/O Pin Assignments table in HPS Boot Flash Interface on page 115 • Updated the name of the battery used in Real-Time Clock (HPS) on page 91
August 2017	2017.08.08	Added a Caution note to Handling the Board on page 9
December 2016	2016.12.29	• Updated FMCA LVDS Signal I/O Assignments Table in FMC on page 75
December 2016	2016.12.22	Updates: • Table added to General User Input/Output on page 67
July 2016	2016.07.29	Updated: • Board Inspection on page 10 • Installing the USB-Blaster Driver on page 13 • Default Switch and Jumper Settings on page 16 • Version Selector on page 22 • The System Info Tab on page 26 • System Controller Configuration on page 60 • FPGA and I/O MUX CPLD Programming over On-Board USB-Blaster II on page 61 • FPGA-I/O MAX V Interface on page 93
June 2016	2016.06.30	Added: • Version Selector on page 22 • The EEPROM Tab on page 43 Updated: • Installing the USB-Blaster Driver on page 13 • Board Test System GUI Screenshots
May 2016	2016.05.26	Updated:

continued...

Intel Corporation. All rights reserved. Intel, the Intel logo, and other Intel marks are trademarks of Intel Corporation or its subsidiaries. Intel warrants performance of its FPGA and semiconductor products to current specifications in accordance with Intel's standard warranty, but reserves the right to make changes to any products and services at any time without notice. Intel assumes no responsibility or liability arising out of the application or use of any information, product, or service described herein except as expressly agreed to in writing by Intel. Intel customers are advised to obtain the latest version of device specifications before relying on any published information and before placing orders for products or services.
*Other names and brands may be claimed as the property of others.

ISO 9001:2015 Registered

Date	Version	Changes
		• FPGA-I/O MAX V Interface on page 93 • Power Distribution System on page 118
May 2016	2016.05.24	Updated: FPGA-I/O MAX V Interface on page 93
April 2016	2016.04.04	Updated: • Table 49 on page 99 • Table 52 on page 106 • Table 53 on page 112 • Table 54 on page 115
March 2016	2016.03.18	Production release.

A.2. Compliance and Conformity Statements

A.2.1. CE EMI Conformity Caution

This board is delivered conforming to relevant standards mandated by Directive 2004/108/EC. Because of the nature of programmable logic devices, it is possible for the user to modify the kit in such a way as to generate electromagnetic interference (EMI) that exceeds the limits established for this equipment. Any EMI caused as the result of modifications to the delivered material is the responsibility of the user.